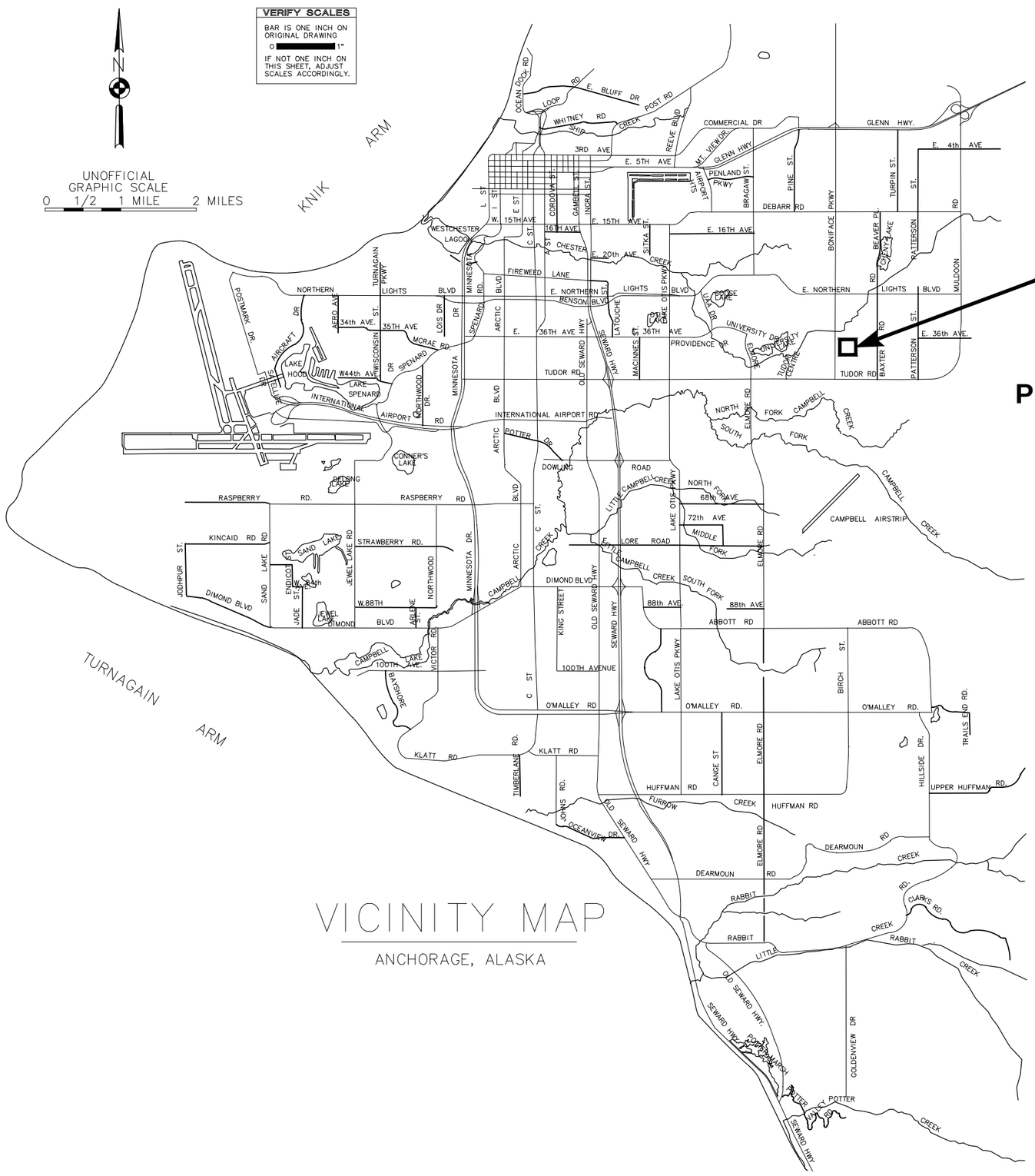

VICINITY MAP

ANCHORAGE, ALASKA

MUNICIPALITY OF ANCHORAGE
PROJECT MANAGEMENT AND ENGINEERING DEPARTMENT

IMAGE DRIVE / REFLECTION DRIVE AREA
ROAD RECONSTRUCTION - PHASE 2

PROJECT NUMBER: 14-50
SEPT 2019

65% DESIGN

PREPARED BY:

CRW ENGINEERING GROUP, LLC
3940 ARCTIC BLVD. SUITE 300
ANCHORAGE, ALASKA 99503
PHONE: (907) 562-3252
#AECL882-AK

APPROVED BY:

KENT KOHLHASE, P.E.
MUNICIPAL ENGINEER

SHEET INDEX

SHEET NO.	DESCRIPTION	SCHED
GENERAL SHEETS		
G1	COVER SHEET	ALL
G2	SHEET INDEX	ALL
G3	GENERAL NOTES	ALL
G4	LEGEND AND ABBREVIATIONS	ALL
G5	KEY MAP	ALL
SURVEY SHEETS		
V1	SURVEY CONTROL SHEET	ALL
V2	SURVEY CONTROL SHEET	ALL
V3	SURVEY CONTROL SHEET	ALL
V4	SURVEY CONTROL SHEET	ALL
DEMOLITION SHEETS		
B1	DEMOLITION PLAN	ALL
B2	DEMOLITION PLAN	ALL
B3	DEMOLITION PLAN	ALL
B4	DEMOLITION PLAN	ALL
B5	DEMOLITION PLAN	ALL
B6	DEMOLITION PLAN	ALL
B7	DEMOLITION SUMMARY	ALL
B8	DEMOLITION SUMMARY	ALL
B9	DEMOLITION SUMMARY	ALL
B10	DEMOLITION SUMMARY	ALL
B11	DEMOLITION SUMMARY	ALL
TYPICAL SECTIONS		
C1	TYPICAL SECTIONS	SCHED A
C2	TYPICAL SECTIONS	SCHED A
C3	TYPICAL SECTIONS	SCHED A
ROADWAY SHEETS		
R1	ROADWAY PLAN AND PROFILE	SCHED A
R2	ROADWAY PLAN AND PROFILE	SCHED A
R3	ROADWAY PLAN AND PROFILE	SCHED A
R4	ROADWAY PLAN AND PROFILE	SCHED A
R5	ROADWAY PLAN AND PROFILE	SCHED A
R6	ROADWAY PLAN AND PROFILE	SCHED A
R7	ROADWAY PLAN AND PROFILE	SCHED A
R8	ROADWAY PLAN AND PROFILE	SCHED A
R9	ROADWAY PLAN AND PROFILE	SCHED A
R10	INTERSECTION LAYOUT	SCHED A
R11	INTERSECTION LAYOUT	SCHED A
R12	INTERSECTION & CURB LAYOUT	SCHED A
R13	DRIVEWAY RECONSTRUCTION PLANS	SCHED A
R14	DRIVEWAY RECONSTRUCTION PLANS	SCHED A
R15	PARCEL 118 & 201 GRADING PLAN	SCHED A
SUMMARY TABLES		
T1	ROADWAY SUMMARY TABLES	SCHED A
T2	ROADWAY SUMMARY TABLES	SCHED A
T3	ROADWAY SUMMARY TABLES	SCHED A
T4	ROADWAY SUMMARY TABLES	SCHED A
T5	ROADWAY SUMMARY TABLES	SCHED A
T6	ROADWAY SUMMARY TABLES	SCHED A
DETAILS		
D1	ROADWAY DETAILS	SCHED A
D2	ROADWAY DETAILS	SCHED A
D3	ROADWAY DETAILS	SCHED A
D4	ROADWAY DETAILS	SCHED A
D5	ROADWAY DETAILS	SCHED A
D6	ROADWAY DETAILS	SCHED A

SHEET INDEX

SHEET NO.	DESCRIPTION	SCHED
SIGNING & STRIPING		
S1	SIGNING & STRIPING	SCHED A
S2	SIGNING & STRIPING	SCHED A
S3	SIGNING & STRIPING	SCHED A
S4	SIGN SUMMARY TABLES	SCHED A
STORM DRAIN SHEETS		
SD1	STORM DRAIN PLAN & PROFILE	SCHED B
SD2	STORM DRAIN PLAN & PROFILE	SCHED B
SD3	STORM DRAIN PLAN & PROFILE	SCHED B
SD4	STORM DRAIN PLAN & PROFILE	SCHED B
SD5	STORM DRAIN PLAN & PROFILE	SCHED B
SD6	STORM DRAIN PLAN & PROFILE	SCHED B
SD7	STORM DRAIN PLAN & PROFILE	SCHED B
SD8	STORM DRAIN PLAN & PROFILE	SCHED B
SD9	STORM DRAIN PLAN & PROFILE	SCHED B
SD10	STORM DRAIN PLAN & PROFILE	SCHED B
SD11	STORM DRAIN DETAILS	SCHED B
SD12	STORM DRAIN DETAILS	SCHED B
SD13	STORM DRAIN DETAILS	SCHED B
SD14	STORM DRAIN SUMMARY TABLES	SCHED B
ILLUMINATION SHEETS		
I1	ILLUMINATION IMPROVEMENTS	SCHED C
I2	ILLUMINATION IMPROVEMENTS	SCHED C
I3	ILLUMINATION IMPROVEMENTS	SCHED C
I4	ILLUMINATION IMPROVEMENTS	SCHED C
I5	ILLUMINATION IMPROVEMENTS	SCHED C
I6	ILLUMINATION IMPROVEMENTS	SCHED C
I7	ILLUMINATION NOTES, SCHEDULES, AND DETAILS	SCHED C
I8	LC–R POWER ONE–LINE, PANEL SCHEDULE, AND CONTROL SCHEMATIC	SCHED C
I9	LC–T POWER ONE–LINE, PANEL SCHEDULE, AND CONTROL SCHEMATIC	SCHED C
HEAT TRACE SHEETS		
E1	HEAT TRACE DEMOLITION PLAN	SCHED B
E2	HEAT TRACE REMODEL PLAN	SCHED B
E3	HEAT TRACE CONTROLS SCHEMATIC & DETAILS	SCHED B
E4	HEAT TRACE DETAILS	SCHED B
E5	HEAT TRACE SCHEDULES & DETAILS	SCHED B
E6	HEAT TRACE LOAD CENTER SCHEDULE & ONE–LINE	SCHED B
E7	EXISTING MANHOLE HEAT TRACE DETAIL	SCHED B
E8	HEAT TRACE LOAD CENTER SCHEDULE & ONE–LINE	SCHED B

WORK SCHEDULES

A	ROADWAY IMPROVEMENTS
B	DRAINAGE IMPROVEMENTS
C	ILLUMINATION IMPROVEMENTS

RECORD DRAWING

1. DATA PROVIDED BY: _____ TITLE: _____
   THIS WILL SERVE TO CERTIFY THAT THESE RECORD DRAWINGS ARE A TRUE AND ACCURATE REPRESENTATION OF THE PROJECT AS CONSTRUCTED.
   CONTRACTOR: _____
   BY: _____ TITLE: _____ DATE: _____
2. DATA TRANSFERRED BY: _____ TITLE: _____
   COMPANY: _____ DATE: _____
3. BASED ON PERIODIC FIELD OBSERVATIONS BY THE ENGINEER (OR AN INDIVIDUAL UNDER HIS/HER DIRECT SUPERVISION), THE CONTRACTOR–PROVIDED DATA APPEARS TO REPRESENT THE PROJECT AS CONSTRUCTED.
   DATA TRANSFER CHECKED BY: _____ TITLE: _____
   COMPANY: _____ DATE: _____
   BY: _____

DATA	DRAWN BY	CHECKED BY
BASE	TS	MJ
TOPOGRAPHY	TS	MJ
PROFILE	RB	JK
STORM SEWER	JH	JK
WATER/SANITARY SEWER	MV	JK
GAS	MV	JK
TELEPHONE	MV	JK
ELECTRIC	TK	BM
DESIGN	RB	JK
QUANTITIES	RB	JK
PRELIMINARY/FINAL	RB	JK
MUNICIPAL/STATE	RB	JK

PLAN CHECK

FIELD BOOKS	BM NO.	LOCATION	ELEV.
DESIGN CRW Books 147, 148, & 151	GAAB 66	See page D–24 of the MOA Benchmark Book	238.10
	GAAB 96	See page D–26 of the MOA Benchmark Book	313.83
STAKING			
ASBUILT			
CONTRACTOR	BASIS OF THIS DATUM GAAB 1972 ADJUST		
INSPECTOR			

CONSTRUCTION RECORD — VERTICAL DATUM

REV	DATE	DESCRIPTION	BY

REVISIONS

CRW ENGINEERING GROUP, LLC
3940 ARCTIC BLVD. SUITE 300
ANCHORAGE, ALASKA 99503
PHONE: (907) 562–3252
#ECL882–AK

CONSULTANT

STATE OF ALASKA 49TH
Justin T. Keene
CE-11775
REGISTERED PROFESSIONAL ENGINEER

SEAL

MUNICIPALITY OF ANCHORAGE

PROJECT MANAGEMENT AND ENGINEERING DEPARTMENT

14–50 IMAGE DRIVE / REFLECTION DRIVE AREA ROAD RECONSTRUCTION – PHASE 2 ALL

SHEET INDEX

SCALE HOR. N/A VER. N/A | GRID SW1638, SW1738 | DATE SEPT 2019 | STATUS 65% | SHEET G2 of G5

File:J:\JobsData\10133.00 Image Reflection Area Reconstruction\00 CADD\01 Working Set\01 Civil\Phase 2\10133.00 Sheet Index – Phase 2.dwg

GENERAL NOTES

1. ALL WORK SHALL BE IN ACCORDANCE WITH THE MUNICIPALITY OF ANCHORAGE (MOA) STANDARD SPECIFICATIONS, DATED 2015, (HEREINAFTER REFERRED TO AS MASS), THE LATEST EDITION OF THE AWWU DESIGN AND CONSTRUCTION PRACTICES MANUAL AND THE SPECIAL PROVISIONS.

2. THE LOCATION OF THE EXISTING FEATURES AND UTILITIES SHOWN IN THESE DRAWINGS ARE APPROXIMATE. THE CONTRACTOR SHALL VERIFY THE HORIZONTAL AND VERTICAL LOCATION OF ALL UTILITIES ENCOUNTERED AND RECORD THEIR LOCATION ON THE CONTRACT RECORD DRAWINGS. DISCREPANCIES SHALL BE BROUGHT TO THE IMMEDIATE ATTENTION OF THE ENGINEER.

3. THE CONTRACTOR SHALL OBTAIN ALL NECESSARY PERMITS PRIOR TO BEGINNING CONSTRUCTION. THE PERMITS SHALL BE MAINTAINED ON THE PROJECT SITE.

4. ALL WORK IN CLOSE PROXIMITY TO EXISTING OVERHEAD TELEPHONE AND ELECTRIC UTILITIES SHALL COMPLY WITH APPLICABLE FEDERAL, STATE AND LOCAL STATUTES, CODES AND GUIDELINES AND THE CLEARANCE REQUIREMENTS OF THE SERVING UTILITY.

5. LIMITS OF EXCAVATION SHOWN ON THE DRAWINGS ARE APPROXIMATE. ACTUAL LIMITS WILL BE DETERMINED IN THE FIELD BY THE ENGINEER DURING CONSTRUCTION OPERATIONS.

6. GEOTECHNICAL (SOILS) INFORMATION IS INCLUDED IN THE CONTRACT DOCUMENTS.

7. ALL WORK SHALL BE PERFORMED WITHIN PUBLIC RIGHT-OF-WAY, PUBLIC USE EASEMENT, SLOPE EASEMENT, TEMPORARY CONSTRUCTION EASEMENT, DRAINAGE EASEMENT, OR TEMPORARY CONSTRUCTION PERMIT AREA. ALL DISTURBED AREAS SHALL BE RESTORED TO ORIGINAL CONDITION, UNLESS OTHERWISE NOTED. REVEGETATION SHALL BE IN ACCORDANCE WITH THE PLANS AND SPECIFICATIONS.

8. CONTRACTOR SHALL RESTORE DISTURBED PROPERTY TO PRE-CONSTRUCTION CONDITIONS, UNLESS OTHERWISE DIRECTED BY ENGINEER. PAYMENT FOR RESTORING DISTURBED PROPERTY OUTSIDE OF IDENTIFIED CONSTRUCTION LIMITS SHALL BE CONSIDERED INCIDENTAL TO THE PROJECT AND NO SEPARATE PAYMENT SHALL BE MADE. DISTURBED AREAS NOT BEING PAVED SHALL BE TOPSOILED AND SEEDED WITH SCHEDULE A SEEDING MIX UNLESS OTHERWISE NOTED.

9. PROJECT CLEARING AND GRUBBING LIMITS SHALL COINCIDE WITH THE LIMITS OF DISTURBANCE AS SHOWN ON THE DEMOLITION (B) SHEETS. CONTRACTOR SHALL OBTAIN APPROVAL OF THE CLEARING AND GRUBBING LIMITS BY THE ENGINEER PRIOR TO CLEARING AND GRUBBING, SEE SPECIFICATIONS FOR MORE INFORMATION.

10. SLOPE LIMITS SHOWN ON THE DRAWINGS ARE APPROXIMATE. THE CONTRACTOR SHALL DETERMINE THE ACTUAL SLOPE LIMITS BASED ON SURVEY DATA.

11. IN PREPARATION FOR AND IMMEDIATELY PRIOR TO PAVING, THE CONTRACTOR SHALL SAW CUT AND REMOVE ADDITIONAL PAVEMENT BEYOND THE INITIAL SAW CUT, A MINIMUM OF 1-FOOT ONTO UNDISTURBED ASPHALT. AT TRANSVERSE JOINTS FINAL SAW CUT LINE SHALL BE SKEWED 15° – 25° PER DETAIL 3, SHEET D4. TACK COAT SHALL BE APPLIED TO THE SAWN FACE OF ASPHALT PRIOR TO BEGINNING PAVING.

12. PAVEMENT CROSS SLOPE ON SIDE STREETS SHALL VARY AT INTERSECTIONS TO PROVIDE POSITIVE DRAINAGE. SEE ROADWAY (R) SHEETS FOR INTERSECTION LAYOUTS.

13. ALL WORK AND MATERIALS REQUIRED FOR REMOVING ANY LITTER OR DEBRIS CREATED BY CONSTRUCTION OPERATIONS WITHIN THE PROJECT LIMITS SHALL BE CONSIDERED INCIDENTAL TO THE PROJECT AND NO SEPARATE PAYMENT WILL BE MADE.

14. ALL ORGANIC MATERIAL SHALL BE REMOVED FROM THE SUBGRADE TO A DEPTH TO BE DETERMINED BY THE ENGINEER. NO ORGANIC MATERIAL OR OTHER DELETERIOUS MATERIAL SHALL BE UTILIZED FOR BACKFILL.

15. THE CONTRACTOR SHALL SUBMIT RECORD SURVEY NOTES WITH THE RECORD DRAWINGS.

16. EXCAVATION SHALL BE MEASURED BY CROSS-SECTION AND SHALL BE LIMITED TO THE PAY LIMITS IDENTIFIED IN THE TYPICAL CROSS SECTIONS, UNLESS ADDITIONAL EXCAVATION IS DIRECTED BY THE ENGINEER.

17. THE ROADWAY STATIONING IS NOT RIGHT-OF-WAY CENTERLINE PER SURVEY CONTROL DRAWING UNLESS OTHERWISE NOTED. SEE SURVEY CONTROL DRAWING FOR HORIZONTAL AND VERTICAL CONTROL.

18. THE EASEMENTS AND TEMPORARY CONSTRUCTION PERMITS ACQUIRED FOR THIS PROJECT MAY HAVE RESTRICTIONS. SEE CONTRACT DOCUMENTS FOR RESTRICTIONS.

19. ALL CURB LOCATIONS, RADIUS MEASUREMENTS AND ELEVATIONS ARE TO THE TOP BACK OF CURB (TBC) UNLESS OTHERWISE NOTED.

20. FURNISH AND INSTALL 4" PIPE INSULATION BOARD (R-20) BETWEEN THE STORM DRAIN IMPROVEMENTS AND THE WATER AND SEWER UTILITIES WHEN THE VERTICAL CLEARANCE IS LESS THAN THREE FEET. IF 18 INCHES OF VERTICAL SEPARATION BETWEEN WATER AND SEWER/STORM DRAINS CAN NOT BE MAINTAINED THEN WATER RELOCATION WILL BE REQUIRED. SEWER/STORM DRAIN PIPE JOINTS SHALL BE PLACED AT LEAST NINE (9) FEET FROM A WATER CROSSING.

21. EXISTING WATER AND SEWER SERVICE LINES ARE NOT SHOWN IN THE PROFILES UNLESS SPECIFICALLY CALLED OUT.

22. WATER RESULTING FROM THE CONTRACTOR'S DEWATERING EFFORT MAY NOT BE PUMPED OR OTHERWISE DIVERTED INTO EXISTING STORM DRAINS OR SANITARY SEWERS UNLESS REQUIRED PERMITS, INCLUDING, BUT NOT LIMITED TO, THE MUNICIPALITY OF ANCHORAGE STORM WATER PLAN REVIEW OFFICE, AWWU, AND THE ALASKA DEPARTMENT OF ENVIRONMENTAL CONSERVATION, ARE OBTAINED BY THE CONTRACTOR. UNDER NO CIRCUMSTANCES SHALL THE CONTRACTOR BE ALLOWED TO DIVERT WATER FROM EXCAVATION ONTO ROADWAYS. THE CONTRACTOR SHALL PROVIDE DISPOSAL SITE FOR EXCESS WATER AND SHALL BE RESPONSIBLE FOR SECURING ALL NECESSARY PERMITS AND APPROVALS. THE CONTRACTOR SHALL PROVIDE COPIES OF PERMITS AND APPROVALS TO THE ENGINEER AND MOA ROW PERMIT OFFICE PRIOR TO BEGINNING DEWATERING.

23. ALL CURB AND GUTTER SHALL BE PAID AS "P.C.C. CURB AND GUTTER (ALL TYPES)" EXCEPT FOR CURBS WITH STEEL CURB FACING WHICH SHALL BE PAID AS "P.C.C. CURB AND GUTTER (TYPE 1, STEEL CURB FACING)".

24. EXISTING UTILITIES AND PROPOSED UTILITIES ARE NOT SHOWN IN THE TYPICAL CROSS SECTIONS.

25. THE MATCH EXISTING ELEVATIONS AS SHOWN IN THE PLANS ARE APPROXIMATE. CONTRACTOR SHALL ADJUST PROPOSED GRADES AS REQUIRED TO MATCH INTO EXISTING ELEVATIONS PER THE DIRECTION OF THE ENGINEER.

26. ALL FILL, USABLE EXCAVATION, AND TRENCH BACKFILL SHALL BE COMPACTED TO NINETY-FIVE PERCENT (95%) OF MAXIMUM DENSITY AT OPTIMUM MOISTURE CONTENT, PER MASS DIVISION 20 EARTHWORK, BASED ON MODIFIED PROCTOR TEST VALUES. ALL FILLS SHALL BE PLACED IN LIFTS NOT EXCEEDING 12 INCHES.

RECORD DRAWING

1. DATA PROVIDED BY: _____ TITLE: _____
   THIS WILL SERVE TO CERTIFY THAT THESE RECORD DRAWINGS ARE A TRUE AND ACCURATE REPRESENTATION OF THE PROJECT AS CONSTRUCTED.
   CONTRACTOR: _____
   BY: _____ TITLE: _____ DATE: _____
2. DATA TRANSFERRED BY: _____ TITLE: _____
   COMPANY: _____ DATE: _____
3. BASED ON PERIODIC FIELD OBSERVATIONS BY THE ENGINEER (OR AN INDIVIDUAL UNDER HIS/HER DIRECT SUPERVISION), THE CONTRACTOR-PROVIDED DATA APPEARS TO REPRESENT THE PROJECT AS CONSTRUCTED.
   DATA TRANSFER CHECKED BY: _____ TITLE: _____
   COMPANY: _____ DATE: _____
   BY: _____

DATA	DRAWN BY	CHECKED BY
BASE	TS	MJ
TOPOGRAPHY	TS	MJ
PROFILE	RB	JK
STORM SEWER	JH	JK
WATER/SANITARY SEWER	MV	JK
GAS	MV	JK
TELEPHONE	MV	JK
ELECTRIC	TK	BM
DESIGN	RB	JK
QUANTITIES	RB	JK
PRELIMINARY/FINAL	RB	JK
MUNICIPAL/STATE	RB	JK

PLAN CHECK

FIELD BOOKS	BM NO.	LOCATION	ELEV.
DESIGN CRW Books 147, 148, & 151	GAAB 66	See page D-24 of the MOA Benchmark Book	238.10
	GAAB 96	See page D-26 of the MOA Benchmark Book	313.83
STAKING			
ASBUILT			
CONTRACTOR	BASIS OF THIS DATUM GAAB 1972 ADJUST		
INSPECTOR			

CONSTRUCTION RECORD

VERTICAL DATUM

REV	DATE	DESCRIPTION	BY

REVISIONS

CRW ENGINEERING GROUP, LLC
3940 ARCTIC BLVD. SUITE 300
ANCHORAGE, ALASKA 99503
PHONE: (907) 562-3252
#AECL882-AK

CONSULTANT

STATE OF ALASKA 49TH Justin T. Keene CE-11775 REGISTERED PROFESSIONAL ENGINEER

SEAL

MUNICIPALITY OF ANCHORAGE

PROJECT MANAGEMENT AND ENGINEERING DEPARTMENT

14-50 IMAGE DRIVE / REFLECTION DRIVE AREA ROAD RECONSTRUCTION – PHASE 2 ALL

GENERAL NOTES

SCALE HOR. N/A VER. N/A | GRID SW1638, SW1738 | DATE SEPT 2019 | STATUS 65% | SHEET G3 of G5

File:J:\JobsData\10133.00 Image Reflection Area Reconstruction\00 CADD\01 Working Set\01 Civil\Phase 2\10133.00 General Notes - Phase 2.dwg

PLAN LEGEND

PROPERTY

EXISTING	PROPOSED	
		CENTERLINE
		EASEMENT LINE
		PROPERTY LINE
		ROW LINE
		SECTION LINE
		TEMPORARY CONSTRUCTION EASEMENT/PERMIT

UTILITY

EXISTING	PROPOSED	
		ABANDONED UTILITY
C		CABLE TV LINE (UNDERGROUND)
OC		CABLE TV LINE (OVERHEAD)
U.C.		CABLE TV PEDESTAL
		CONTROLLER OR ATR CABINET
		CULVERT
		DRY WELL
E		ELECTRIC LINE (UNDERGROUND)
OE		ELECTRIC LINE (OVERHEAD)
OEC		ELECTRIC & CABLE TV LINE (OVERHEAD)
OET		ELECTRIC & TELEPHONE LINE (OVERHEAD)
		ELECTRIC JB TYPE IA
		ELECTRIC JB TYPE II
		ELECTRIC JB TYPE III
		ELECTRIC LOAD CENTER
E		ELECTRIC MANHOLE/JB
E.M.		ELECTRIC METER
U.E.		ELECTRIC PEDESTAL UNDERGROUND
		ELECTRIC SIGN
SC		ELECTRIC SWITCH CABINET
T		ELECTRIC TRANSFORMER
E		ELECTRIC VAULT
FO		FIBER OPTIC LINE (UNDERGROUND)
FO		FIBER OPTIC VAULT
FD		FLOOR DRAIN
FS	FS	FOOTING DRAIN SERVICE LINE
FS	FS	FOOTING DRAIN SERVICE CONNECTION
G		GAS LINE
G.M.		GAS METER
		GAS VALVE
		GUY POLE
		GUY ANCHOR
		JOINT USE ELECTRIC & TELEPHONE POLE
L		LIGHTING LINE
		LUMINAIRE
		LUMINAIRE (PEDESTRIAN)
S	S	SANITARY SEWER LINE
		SANITARY SEWER MANHOLE
		SANITARY SEWER SERVICE CONNECTION
C.O.		SANITARY SEWER CLEANOUT
SD	SD	STORM DRAIN LINE
SB	SB	SUBDRAIN LINE
		STORM DRAIN CATCH BASIN
		STORM DRAIN CATCH BASIN MANHOLE
		STORM DRAIN MANHOLE
		STUBOUT CAPPED OR PLUGGED END
OHT/C		TELEPHONE & CABLE TV LINE (OVERHEAD)
OT		TELEPHONE LINE (OVERHEAD)

UTILITY

EXISTING	PROPOSED	
T		TELEPHONE LINE (UNDERGROUND)
T		TELEPHONE MANHOLE
U.T.		TELEPHONE PEDESTAL
413	414	TRAFFIC DETECTOR LOOPS
TF		TRAFFIC LINE (UNDERGROUND)
S	S	TRAFFIC SIGNAL POLE
S	S	TRAFFIC SIGNAL POLE/LUMINAIRE
		UTILITY POLE
W	W	WATER LINE
		WATER FIRE HYDRANT
		WATER KEY BOX
W		WATER MANHOLE
		WATER VALVE
		WATER WELL

ROADWAY

EXISTING	PROPOSED	
		APPROX SLOPE LIMITS (CUT)
		APPROX SLOPE LIMITS (FILL)
		CURB & GUTTER
		EDGE OF PAVEMENT
		EDGE OF SIDEWALK
		GUARDRAIL, BARRIER RAIL
		RETAINING WALL (TYPE VARIES)
		STREET SIGN
		UNPAVED (GRAVEL) EDGE OF ROAD/DRIVEWAY

MISCELLANEOUS

EXISTING	PROPOSED	
		BLUFF AREA/ EARTHWORK SLOPE
		BOULDER
		DECK
		DRAINAGE ARROW (DIRECTION OF FLOW)
		DRAINAGE SWALE
		FENCE (TYPE VARIES)
		FENCE (DECORATIVE)
		HOUSE OR STRUCTURE
		LANDSCAPING ROCK
M.B.	M.B.	MAILBOX (INDIVIDUAL)
		MAILBOX (CLUSTER)
N.B.		NEWS BOX
		PARKING METER
	1	PARCEL NUMBERS
		STREAM/EDGE OF WATERWAY
		TREE/SHRUB (CONIFEROUS)
		TREE/SHRUB (DECIDUOUS)
		TEST BORING OR TEST HOLE
		VEGETATION & BRUSH

PROFILE LEGEND

SYMBOL

EXISTING	PROPOSED	
		APPROXIMATE EXCAVATION LIMITS
		EXISTING GROUND OVER PIPE
	0.00%	GRADE AT CENTER LINE
		GRADE AT LEFT ROW
		GRADE AT RIGHT ROW
		PIPE (PROFILE)
		PIPE (SECTION)
		STORM DRAIN CATCH BASIN/OGS
		STORM DRAIN/SANITARY SEWER MANHOLE & PIPE
UTILITY CROSSING		UTILITY CROSSING
		INSULATION

LEGEND – SOIL

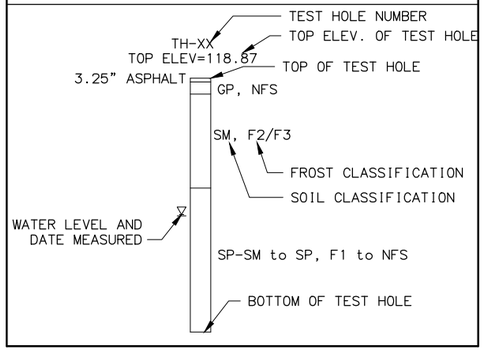

NOTES:

1. STANDARD LEGEND AND ABBREVIATIONS SHOWN. NOT ALL LEGEND ITEMS AND ABBREVIATIONS ARE PART OF THIS CONTRACT.
2. SOIL CLASSIFICATION IS BASED UPON UNIFIED SOIL CLASSIFICATION (ASTM D 2487–00), SEE GEOTECHNICAL SOIL BORING LOGS FOR MORE INFORMATION.
3. SEE LEGEND ON SHEET V1 FOR SURVEY CONTROL SYMBOLS. ADDITIONAL LEGEND AND ABBREVIATION ITEMS NOT SHOWN HERE ARE PROVIDED ON SPECIFIC SHEETS THROUGHOUT THE DRAWINGS.

COMMON ABBREVIATIONS

ABBR.	DESCRIPTION	ABBR.	DESCRIPTION
AC	ASPHALT CONCRETE	OC	ON CENTER
AC	ASBESTOS CONCRETE	OCEW	ON CENTER EACH WAY
APPROX	APPROXIMATE	OD	OUTSIDE DIAMETER
BM	BENCH MARK	OGS	OIL AND GRIT SEPARATOR
BOP	BEGINNING OF PROJECT	OH	OVERHEAD
C&G	CURB AND GUTTER	PC	POINT OF CURVATURE
CB	CATCH BASIN	PCC	PORTLAND CONCRETE CEMENT POINT OF CONTINUOUS CURVATURE
CBMH	CATCH BASIN MANHOLE		
CI	CAST IRON	PI	POINT OF INTERSECTION
C/L, CL	CENTERLINE	PL, P/L	PROPERTY LINE
CMP	CORRUGATED METAL PIPE	PCMP	PRECOATED CORRUGATED METAL PIPE
CO	CLEANOUT	PCPEP	PERFORATED CORRUGATED POLYETHYLENE PIPE
CONST	CONSTRUCTION		
CPEP	CORRUGATED POLYETHYLENE PIPE	PT	POINT OF TANGENCY
DIA	DIAMETER	PUE	PUBLIC USE EASEMENT
DIP	DUCTILE IRON PIPE	PVC	POINT OF VERTICAL CURVATURE
DW	DETECTABLE WARNING	PVC	POLYVINYL CHLORIDE
DWY	DRIVEWAY	PVI	POINT OF VERTICAL INTERSECTION
E	EAST	PVT	POINT OF VERTICAL TANGENT
ELEC	ELECTRIC / ELECTRICAL	REINF	REINFORCEMENT
ELEV, EL	ELEVATION	ROW, R/W	RIGHT OF WAY
EOP	END OF PROJECT / EDGE OF PAVEMENT	RT, R	RIGHT
F&I	FURNISH AND INSTALL	S	SOUTH
FG	FINISHED GRADE	S/W	SIDEWALK
GALV	GALVINIZED	SS	STAINLESS STEEL
GB	GRADE BREAK	SEC COR	SECTION CORNER
JB	JUNCTION BOX	SI	STREET INTERSECTION
LC	LOAD CENTER	ST	STREET
IAW	IN ACCORDANCE WITH	STA	STATION / STATIONING
ID	INSIDE DIAMETER	STD	STANDARD
IE	INVERT ELEVATION	STRUCT	STRUCTURE
INTX	INTERSECTION	TBC	TOP BACK OF CURB
INV	INVERT	TBM	TEMPORARY BENCH MARK
LF	LINEAR FOOT	TCP	TEMPORARY CONSTRUCTION PERMIT
LT, L	LEFT	TELE	TELEPHONE
LUM	LUMINAIRE	TH	TEST HOLE
MAX	MAXIMUM	TW	TOP OF WALL
ME	MATCH EXISTING	TYP	TYPICAL
MH	MANHOLE	UG	UNDERGROUND
MIN	MINIMUM	UON	UNLESS OTHERWISE NOTED
MON	MONUMENT	UTIL	UTILITY
MSL	MEAN SEA LEVEL	VERT	VERTICAL
N	NORTH	VB	VALVE BOX
N/A	NOT APPLICABLE	VC	VERTICAL CURVE
N.I.C.	NOT IN CONTRACT	W	WEST
NTS	NOT TO SCALE	W/	WITH
NWT	NO WATER TABLE		

RECORD DRAWING

THIS WILL SERVE TO CERTIFY THAT THESE RECORD DRAWINGS ARE A TRUE AND ACCURATE REPRESENTATION OF THE PROJECT AS CONSTRUCTED.

CONTRACTOR: _____

BY: _____

TITLE: _____

DATE: _____

DATA	DRAWN BY	CHECKED BY
BASE	TS	MJ
TOPOGRAPHY	TS	MJ
PROFILE	RB	JK
STORM SEWER	JH	JK
WATER/SANITARY SEWER	MV	JK
GAS	MV	JK
TELEPHONE	MV	JK
ELECTRIC	TK	BM
DESIGN	RB	JK
QUANTITIES	RB	JK
PRELIMINARY/FINAL	RB	JK
MUNICIPAL/STATE	RB	JK

PLAN CHECK

FIELD BOOKS
DESIGN CRW Books 147, 148, & 151
STAKING
ASBUILT
CONTRACTOR
INSPECTOR

CONSTRUCTION RECORD

BM NO.	LOCATION	ELEV.
GAAB 66	See page D-24 of the MOA Benchmark Book	238.10
GAAB 96	See page D-26 of the MOA Benchmark Book	313.83

BASIS OF THIS DATUM GAAB 1972 ADJUST

VERTICAL DATUM

REV	DATE	DESCRIPTION	BY

REVISIONS

CRW ENGINEERING GROUP, LLC
3940 ARCTIC BLVD. SUITE 300
ANCHORAGE, ALASKA 99503
PHONE: (907) 562-3252
#ECL582-AK

CONSULTANT

STATE OF ALASKA 49TH
Justin T. Keene
CE-11775
REGISTERED PROFESSIONAL ENGINEER

SEAL

MUNICIPALITY OF ANCHORAGE

PROJECT MANAGEMENT AND ENGINEERING DEPARTMENT

14-50 IMAGE DRIVE / REFLECTION DRIVE AREA ROAD RECONSTRUCTION – PHASE 2 ALL

LEGEND AND ABBREVIATIONS

SCALE HOR. N/A VER. N/A | GRID SW1638, SW1738 | DATE SEPT 2019 | STATUS 65% | SHEET G4 of G5

File: J:\JobsData\10133.00 Image Reflection Area Reconstruction\00 CADD\01 Working Set\01 Civil\Phase 2\10133.00 Legend – Phase 2.dwg

NOTES:

1. EXISTING FEATURES & EASEMENTS ARE NOT SHOWN FOR CLARITY.
2. NOT ALL SHEETS ARE CALLED OUT FOR CLARITY.

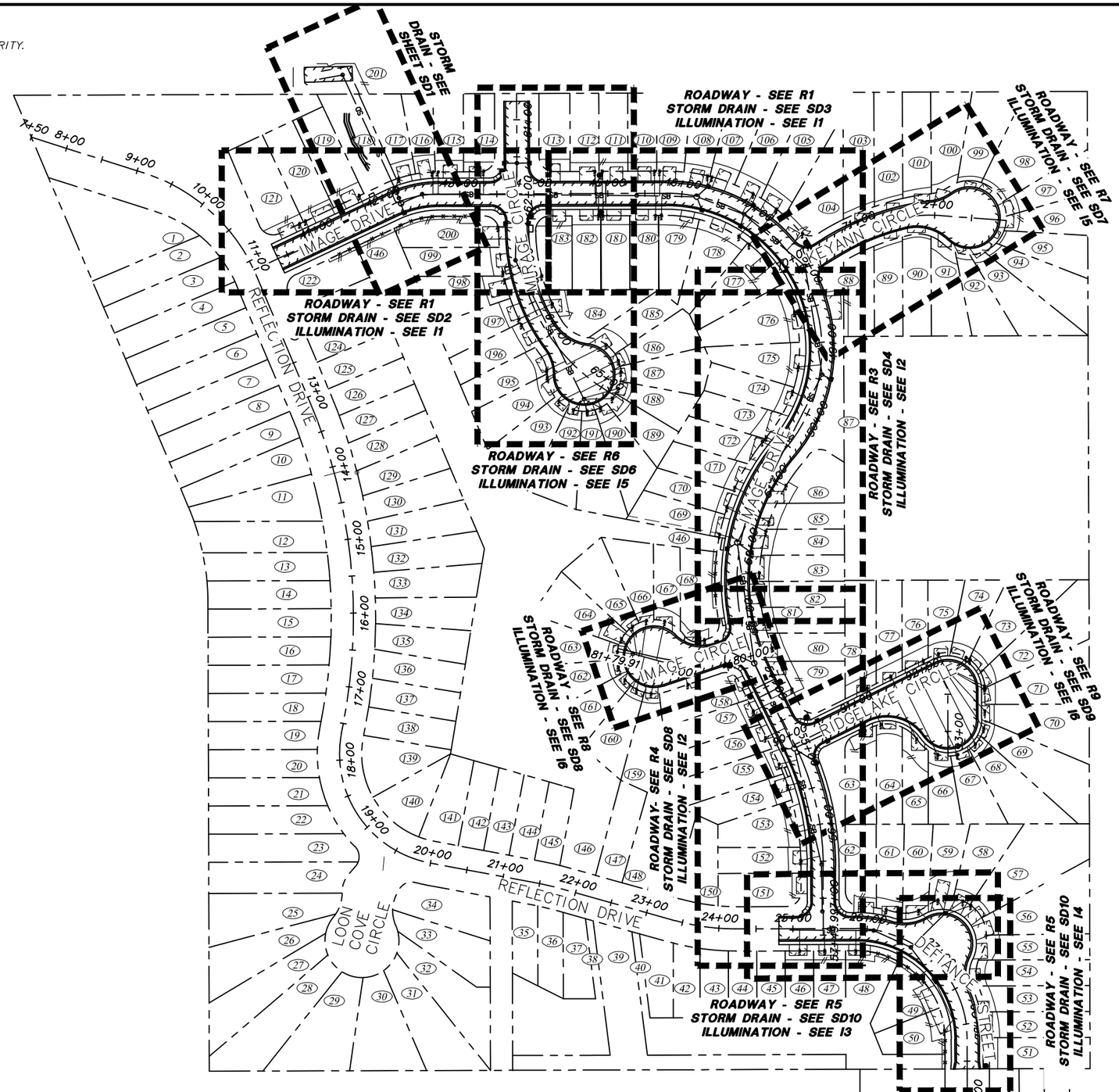

RECORD DRAWING

1. DATA PROVIDED BY: _____ TITLE: _____
   THIS WILL SERVE TO CERTIFY THAT THESE RECORD DRAWINGS ARE A TRUE AND ACCURATE REPRESENTATION OF THE PROJECT AS CONSTRUCTED.
   CONTRACTOR: _____
   BY: _____ TITLE: _____ DATE: _____
2. DATA TRANSFERRED BY: _____ TITLE: _____
   COMPANY: _____ DATE: _____
3. BASED ON PERIODIC FIELD OBSERVATIONS BY THE ENGINEER (OR AN INDIVIDUAL UNDER HIS/HER DIRECT SUPERVISION), THE CONTRACTOR-PROVIDED DATA APPEARS TO REPRESENT THE PROJECT AS CONSTRUCTED.
   DATA TRANSFER CHECKED BY: _____ TITLE: _____
   COMPANY: _____ DATE: _____
   BY: _____

DATA	DRAWN BY	CHECKED BY
BASE	TS	MJ
TOPOGRAPHY	TS	MJ
PROFILE	RB	JK
STORM SEWER	JH	JK
WATER/SANITARY SEWER	MV	JK
GAS	MV	JK
TELEPHONE	MV	JK
ELECTRIC	TK	BM
DESIGN	RB	JK
QUANTITIES	RB	JK
PRELIMINARY/FINAL	RB	JK
MUNICIPAL/STATE	RB	JK

PLAN CHECK

FIELD BOOKS
DESIGN CRW Books 147, 148, & 151
STAKING
ASBUILT
CONTRACTOR
INSPECTOR

CONSTRUCTION RECORD

BM NO.	LOCATION	ELEV.
GAAB 66	See page D-24 of the MOA Benchmark Book	238.10
GAAB 96	See page D-26 of the MOA Benchmark Book	313.83

BASIS OF THIS DATUM GAAB 1972 ADJUST

VERTICAL DATUM

REV	DATE	DESCRIPTION	BY

REVISIONS

CRW ENGINEERING GROUP, LLC
3940 ARCTIC BLVD. SUITE 300
ANCHORAGE, ALASKA 99503
PHONE: (907) 562-3252
#ECL882-AK

CONSULTANT

STATE OF ALASKA 49 TH
Justin T. Keene
CE-11775
REGISTERED PROFESSIONAL ENGINEER

SEAL

MUNICIPALITY OF ANCHORAGE

PROJECT MANAGEMENT AND ENGINEERING DEPARTMENT

14-50 IMAGE DRIVE / REFLECTION DRIVE AREA ROAD RECONSTRUCTION – PHASE 2 ALL

KEY MAP

SCALE HOR. N/A VER. N/A

GRID SW1638, SW1738

DATE SEPT 2019 STATUS 65%

SHEET G5 of G5

File: J:\JobsData\10133.00 Image Reflection Area Reconstruction\00 CADD\01 Working Set\01 Civil\Phase 2\10133.00 Key Map – Phase 2.dwg

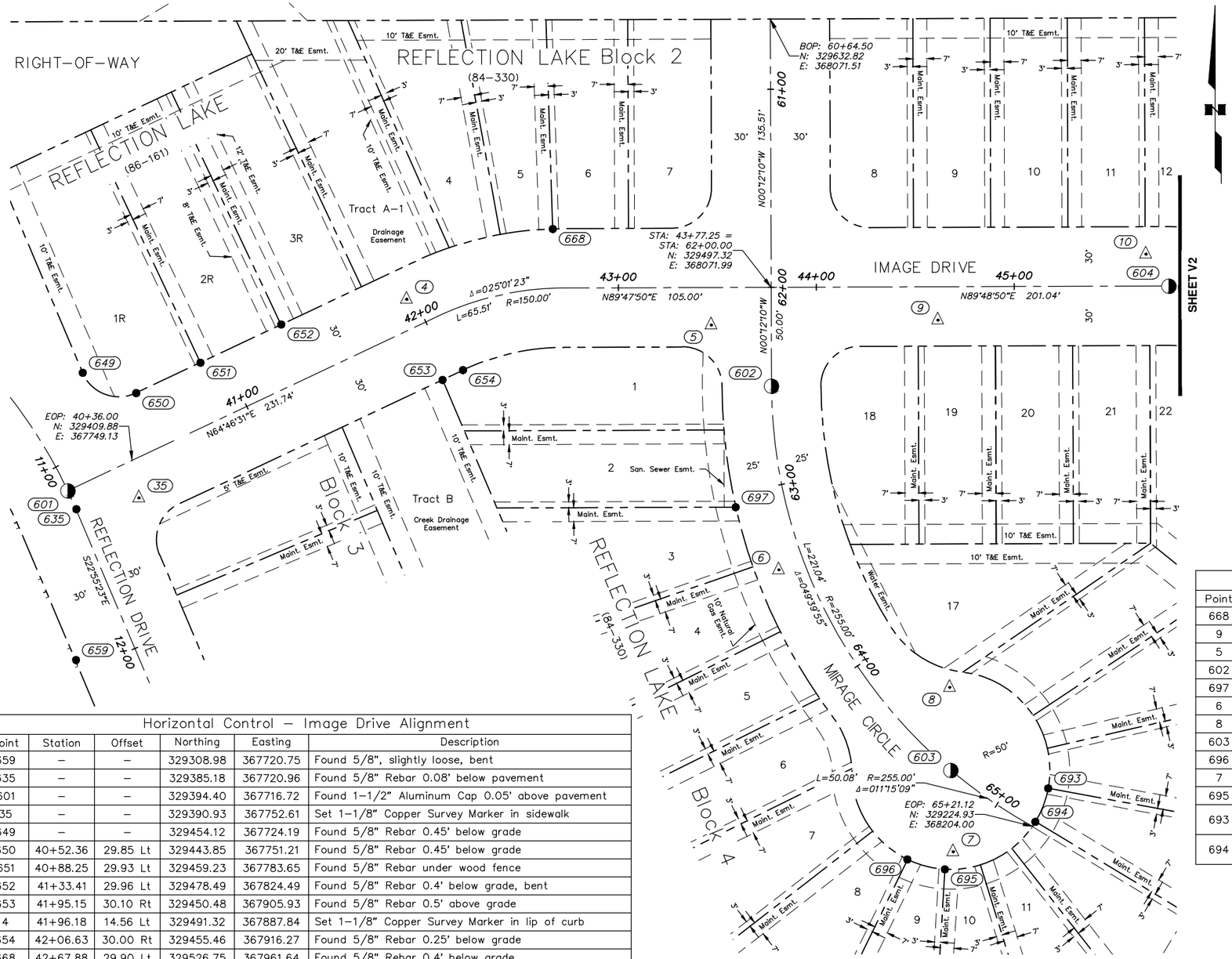

Horizontal Control

Coordinate System:
This project is located entirely within the Anchorage Bowl 2000 adjustment, a local surface grid coordinate system expressed in U.S. Survey feet units developed by the Alaska Department of Transportation.

Basis of Coordinates:
The Basis of Coordinates is NGS Station O'Malley, located near the intersection of the New Seward Highway and O'Malley Road. Said station has Anchorage Bowl 2000 coordinates of 303939.2310 N, 353362.5446 E. U.S. Survey Feet.

Basis of Bearings:
The Basis of Bearings is a local plane bearing between NGS Station O'Malley and NGS Station Loop 2 USE RM 3 1964. NGS Station Loop 2 USE RM 3 1964 bears N 01°43'26.4" E a distance of 49488.4476 feet from NGS Station O'Malley. NGS Station Loop 2 USE RM 3 1964 has Anchorage Bowl 2000 coordinates of 353405.2778 N, 354851.3982 E. U.S. Survey Feet.

Translation Parameters:
To convert the local coordinates to NAD83 (92) State Plane coordinates expressed in U.S. Survey Feet, translate using +2,296,868.6878 N U.S. Survey Feet, +1,312,517.4904 E U.S. Survey Feet, and scale using 0.9998910192.

Vertical Control

Vertical control is based on the MOA Benchmark GAAB-66, Elevation = 238.10 feet (GAAB), as described on page D-24 of the MOA Benchmark Book, and MOA Benchmark GAAB-96, Elevation = 313.83 feet (GAAB), as described on page D-26 of the MOA Benchmark Book.

Horizontal Control – Image Drive Alignment

Point	Station	Offset	Northing	Easting	Description
659	–	–	329308.98	367720.75	Found 5/8", slightly loose, bent
635	–	–	329385.18	367720.96	Found 5/8" Rebar 0.08' below pavement
601	–	–	329394.40	367716.72	Found 1-1/2" Aluminum Cap 0.05' above pavement
35	–	–	329390.93	367752.61	Set 1-1/8" Copper Survey Marker in sidewalk
649	–	–	329454.12	367724.19	Found 5/8" Rebar 0.45' below grade
650	40+52.36	29.85 Lt	329443.85	367751.21	Found 5/8" Rebar 0.45' below grade
651	40+88.25	29.93 Lt	329459.23	367783.65	Found 5/8" Rebar under wood fence
652	41+33.41	29.96 Lt	329478.49	367824.49	Found 5/8" Rebar 0.4' below grade, bent
653	41+95.15	30.10 Rt	329450.48	367905.93	Found 5/8" Rebar 0.5' above grade
4	41+96.18	14.56 Lt	329491.32	367887.84	Set 1-1/8" Copper Survey Marker in lip of curb
654	42+06.63	30.00 Rt	329455.46	367916.27	Found 5/8" Rebar 0.25' below grade
668	42+67.88	29.90 Lt	329526.75	367961.64	Found 5/8" Rebar 0.4' below grade
5	43+46.93	18.92 Rt	329478.29	368041.74	Set 1-1/8" Copper Survey Marker in top back of curb
602	43+77.26	50.06 Rt	329447.26	368072.16	Found 1-1/2" Aluminum Cap 0.05' above pavement
9	44+61.47	16.79 Rt	329480.80	368156.26	Set 1-1/8" Copper Survey Marker in sidewalk
10	45+66.65	16.15 Lt	329514.08	368261.34	Set 1-1/8" Copper Survey Marker in top back of curb
604	45+78.23	0.15 Rt	329497.82	368272.97	Found 1-1/2" Aluminum Cap 0.05' above pavement

Horizontal Control – Mirage Circle Alignment

Point	Station	Offset	Northing	Easting	Description
668	61+70.18	110.24 Rt	329526.75	367961.64	Found 5/8" Rebar 0.4' below grade
9	62+16.82	84.22 Lt	329480.80	368156.26	Set 1-1/8" Copper Survey Marker in sidewalk
5	62+18.92	30.31 Rt	329478.29	368041.74	Set 1-1/8" Copper Survey Marker in top back of curb
602	62+50.07	0.01 Rt	329447.26	368072.16	Found 1-1/2" Aluminum Cap 0.05' above pavement
697	63+06.05	25.09 Rt	329386.19	368054.02	Found 5/8" Rebar 0.25' below grade
6	63+40.06	13.19 Rt	329354.57	368075.86	Set 1-1/8" Copper Survey Marker in lip of curb
8	64+39.80	29.97 Lt	329295.18	368162.18	Set 1-1/8" Copper Survey Marker in top back of curb
603	64+71.08	0.09 Rt	329253.17	368162.77	Found 1-1/2" Aluminum Cap flush with pavement
696	64+81.29	48.88 Rt	329208.21	368140.79	Found 5/8" Rebar flush with ground
7	64+95.41	32.03 Rt	329212.12	368163.94	Set 1-1/8" Copper Survey Marker in top back of curb
695	64+96.75	41.72 Rt	329203.26	368159.71	Found 5/8" Rebar 0.15' below grade
693	65+18.56	20.66 Lt	329244.17	368211.92	Found 5/8" Rebar with 1-1/4" Yellow Plastic Cap flush with ground
694	–	–	329227.27	368205.42	Found 5/8" Rebar with 1-1/4" Yellow Plastic Cap flush with ground

LEGEND

- Existing Aluminum Cap
- Existing Rebar or Iron Pipe
- Control set by CRW
- (500) Control Point Number

RECORD DRAWING

THIS WILL SERVE TO CERTIFY THAT THESE RECORD DRAWINGS ARE A TRUE AND ACCURATE REPRESENTATION OF THE PROJECT AS CONSTRUCTED.

CONTRACTOR: _____

BY: _____

TITLE: _____

DATE: _____

DATA	DRAWN BY	CHECKED BY
BASE	TS	MJ
TOPOGRAPHY	TS	MJ
PROFILE	RB	JK
STORM SEWER	JH	JK
WATER/SANITARY SEWER	MV	JK
GAS	MV	JK
TELEPHONE	MV	JK
ELECTRIC	TK	BM
DESIGN	RB	JK
QUANTITIES	RB	JK
PRELIMINARY/FINAL	RB	JK
MUNICIPAL/STATE	RB	JK
PLAN CHECK		

GRAPHIC SCALE 60 30 0 30 60

FIELD BOOKS	BM NO.	LOCATION	ELEV.
DESIGN CRW Books 147, 148, & 151	GAAB 66	See page D-24 of the MOA Benchmark Book	238.10
	GAAB 96	See page D-26 of the MOA Benchmark Book	313.83
STAKING			
ASBUILT			
CONTRACTOR	BASIS OF THIS DATUM GAAB 1972 ADJUST		
INSPECTOR			
CONSTRUCTION RECORD	VERTICAL DATUM		

REV	DATE	DESCRIPTION	BY
REVISIONS			

CRW ENGINEERING GROUP, LLC
3940 ARCTIC BLVD. SUITE 300
ANCHORAGE, ALASKA 99503
PHONE: (907) 562-3252
#AECL882-AK
CONSULTANT

STATE OF ALASKA 49TH Michael L. Jokela LS-7839 REGISTERED PROFESSIONAL LAND SURVEYOR
SEAL

MUNICIPALITY OF ANCHORAGE

PROJECT MANAGEMENT AND ENGINEERING DEPARTMENT

14-50 IMAGE DRIVE / REFLECTION DRIVE AREA ROAD RECONSTRUCTION – PHASE 2 ALL

SURVEY CONTROL SHEET

BOP IMAGE DRIVE & MIRAGE CIRCLE

SCALE HOR. 1"=30' VER. N/A | GRID SW1638, SW1738 | DATE SEPT 2019 | STATUS 65% | SHEET V1 of V4

File:J:\Jobs\Data\10133.00 Image Reflection Area Reconstruction\00 CADD\01 Working Set\02 Survey\03 Survey Control\10133.00 SCS Phase 2.dwg

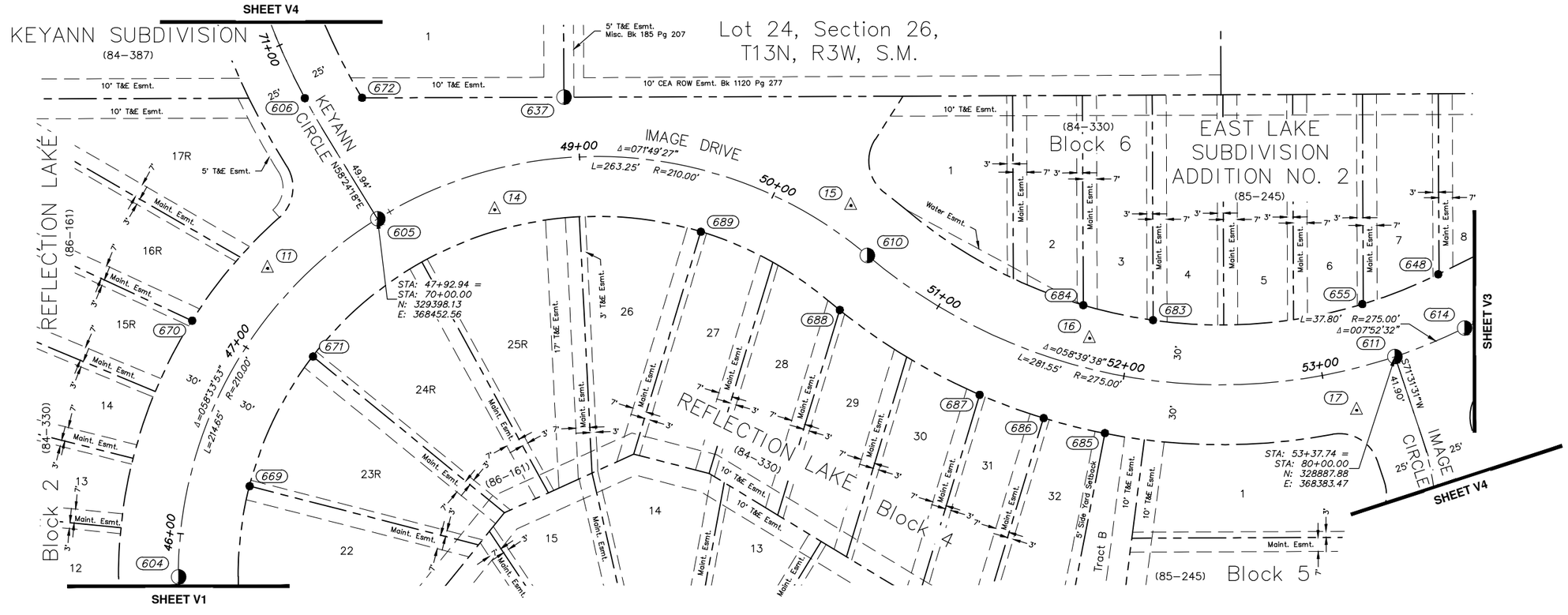

Horizontal Control – Image Drive Alignment					
Point	Station	Offset	Northing	Easting	Description
604	45+78.23	0.15 Rt	329497.82	368272.97	Found 1–1/2" Aluminum Cap 0.05' above pavement
669	46+31.78	30.06 Rt	329462.27	368318.50	Found 5/8" Rebar 0.2' below grade
670	46+96.93	29.90 Lt	329491.05	368401.49	Found 5/8" Rebar with Yellow Plastic Cap 0.8' below grade
671	47+16.81	30.16 Rt	329430.48	368383.48	Found 5/8" Rebar 0.2' below grade
11	47+36.58	15.88 Lt	329453.22	368427.78	Set 1–1/8" Copper Survey Marker in top back of curb
605	47+93.10	0.14 Rt	329397.92	368452.52	Found 1–1/2" Aluminum Cap flush with pavement
606	47+93.46	70.64 Lt	329434.59	368513.07	Found 5/8" Rebar 0.05' below pavement
672	48+12.81	56.92 Lt	329405.89	368513.23	Found 1/2" Rebar 1.2' below grade
14	48+51.54	19.58 Rt	329339.34	368457.13	Set 1–1/8" Copper Survey Marker in sidewalk
637	48+94.35	30.38 Lt	329304.62	368513.58	Found 2–1/2" Aluminum Cap flush with grade
689	49+70.48	30.07 Rt	329235.97	368446.02	Found 5/8" Rebar with Yellow Plastic Cap 0.1' below grade
15	50+35.17	14.94 Lt	329160.73	368459.26	Set 1–1/8" Copper Survey Marker in lip of curb
610	50+56.23	0.01 Rt	329152.44	368434.17	Found 1–1/2" Aluminum Cap 0.05' above pavement

Horizontal Control – Image Drive Alignment					
Point	Station	Offset	Northing	Easting	Description
688	50+62.58	29.94 Rt	329166.32	368406.82	Found 5/8" Rebar flush with ground
687	51+36.75	30.09 Rt	329096.19	368364.30	Found 5/8" Rebar with Yellow Plastic Cap 0.25' below grade
686	51+67.56	29.99 Rt	329064.10	368352.60	Found 5/8" Rebar 0.75' below grade
684	51+70.38	29.96 Lt	329044.18	368409.21	Found 5/8" Rebar with Yellow Plastic Cap 0.45' below grade
16	51+78.56	14.82 Lt	329041.00	368392.61	Set 1–1/8" Copper Survey Marker in lip of curb
685	51+96.12	29.83 Rt	329033.35	368345.09	Found 5/8" Rebar flush with ground
683	52+10.52	30.06 Lt	329009.24	368401.76	Found 5/8" Rebar 0.8' below grade
17	53+12.83	20.61 Rt	328907.09	368356.59	Set 1–1/8" Copper Survey Marker in sidewalk
655	53+29.66	30.06 Lt	328904.26	368409.80	Found 5/8" Rebar with Yellow Plastic Cap 0.3' below grade
611	53+37.72	0.05 Rt	328887.88	368383.41	Found 1–1/2" Aluminum Cap flush with pavement
614	53+75.51	0.08 Rt	328852.95	368397.78	Found 1–1/2" Aluminum Cap 0.05' above pavement
648	53+75.57	29.93 Lt	328866.21	368424.70	Found 5/8" Rebar with Yellow Plastic Cap 0.2' below grade

LEGEND

- Existing Aluminum Cap
- Existing Rebar or Iron Pipe
- Control set by CRW
- (500) Control Point Number

RECORD DRAWING

THIS WILL SERVE TO CERTIFY THAT THESE RECORD DRAWINGS ARE A TRUE AND ACCURATE REPRESENTATION OF THE PROJECT AS CONSTRUCTED.

CONTRACTOR: _____

BY: _____

TITLE: _____

DATE: _____

DATA	DRAWN BY	CHECKED BY
BASE	TS	MJ
TOPOGRAPHY	TS	MJ
PROFILE	RB	JK
STORM SEWER	JH	JK
WATER/SANITARY SEWER	MV	JK
GAS	MV	JK
TELEPHONE	MV	JK
ELECTRIC	TK	BM
DESIGN	RB	JK
QUANTITIES	RB	JK
PRELIMINARY/FINAL	RB	JK
MUNICIPAL/STATE	RB	JK

PLAN CHECK

GRAPHIC 60 30 0 30 60 SCALE

FIELD BOOKS	BM NO.	LOCATION	ELEV.
DESIGN CRW Books 147, 148, & 151	GAAB 66	See page D–24 of the MOA Benchmark Book	238.10
	GAAB 96	See page D–26 of the MOA Benchmark Book	313.83
STAKING			
ASBUILT			
CONTRACTOR	BASIS OF THIS DATUM GAAB 1972 ADJUST		
INSPECTOR			

CONSTRUCTION RECORD — VERTICAL DATUM

REV	DATE	DESCRIPTION	BY

REVISIONS

CRW ENGINEERING GROUP, LLC
3940 ARCTIC BLVD. SUITE 300
ANCHORAGE, ALASKA 99503
PHONE: (907) 562-3252
#AECL882-AK

CONSULTANT

STATE OF ALASKA 49TH Michael L. Jokela LS-7839 REGISTERED PROFESSIONAL LAND SURVEYOR

SEAL

MUNICIPALITY OF ANCHORAGE

PROJECT MANAGEMENT AND ENGINEERING DEPARTMENT

14–50 IMAGE DRIVE / REFLECTION DRIVE AREA ROAD RECONSTRUCTION – PHASE 2 ALL

SURVEY CONTROL SHEET

IMAGE DRIVE

SCALE HOR. 1"=30' VER. N/A | GRID SW1638, SW1738 | DATE SEPT 2019 | STATUS 65% | SHEET V2 of V4

File:J:\JobsData\01133.00 Image Reflection Area Reconstruction\00 CADD\01 Working Set\02 Survey\03 Survey Control\01133.00 SCS Phase 2.dwg

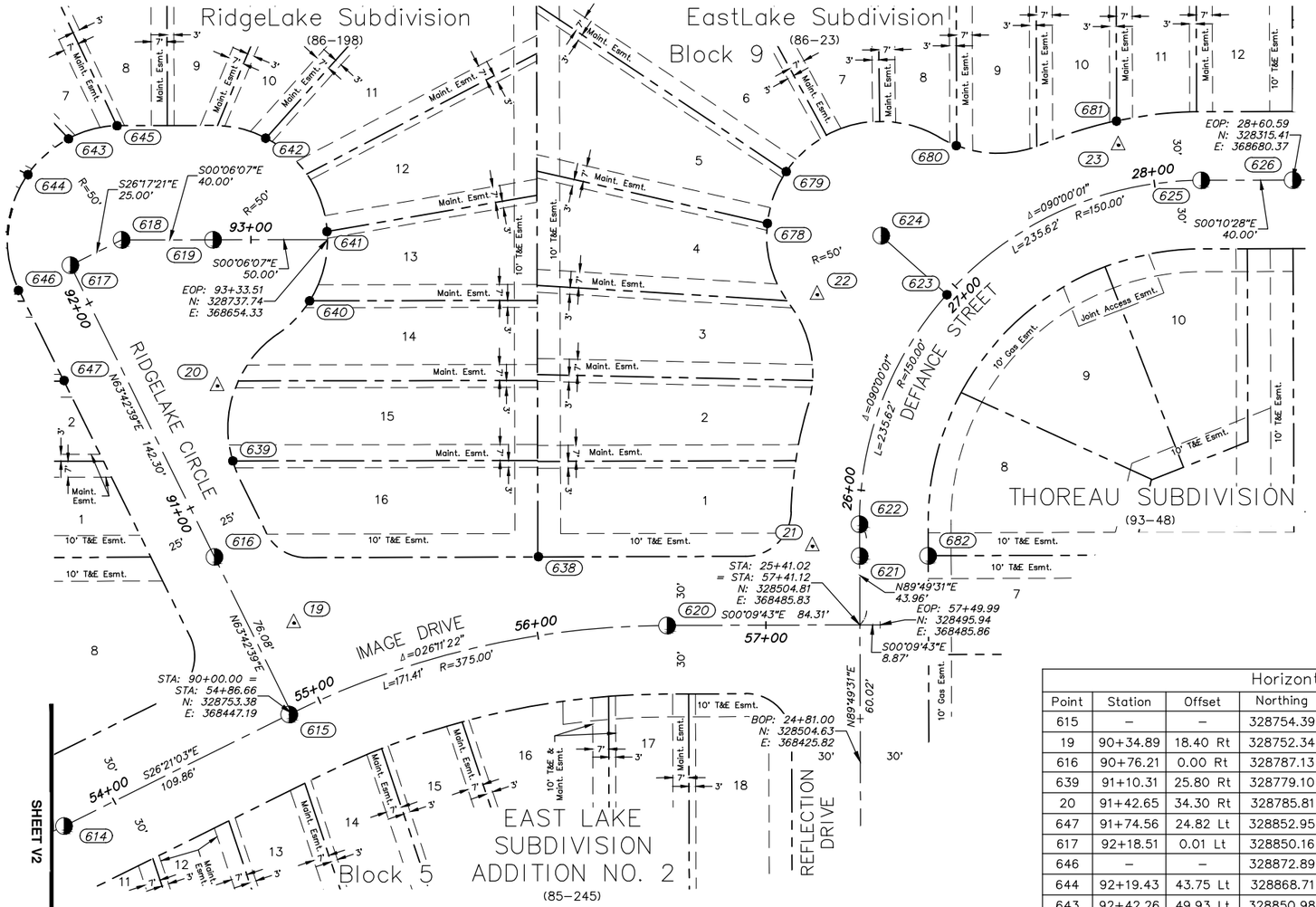

SHEET V2

Horizontal Control – Defiance Street Alignment					
Point	Station	Offset	Northing	Easting	Description
620	25+40.91	84.29 Lt	328589.10	368485.47	Found 1–1/2" Aluminum Cap 0.05' above pavement
621	25+71.07	0.05 Rt	328504.85	368515.89	Found 1–1/2" Aluminum Cap 0.05' above pavement
682	25+71.07	30.00 Rt	328474.90	368515.98	Found 2" Aluminum Cap 0.6' below grade
21	25+75.44	20.58 Lt	328525.50	368520.19	Set 1–1/8" Copper Survey Marker in sidewalk
622	25+84.97	0.02 Rt	328504.92	368529.79	Found 1–1/2" Aluminum Cap flush with pavement
22	26+65.78	45.88 Lt	328523.38	368630.23	Set 1–1/8" Copper Survey Marker in sidewalk
678	26+75.92	81.10 Lt	328545.25	368661.36	Found 5/8" Rebar 0.45' below grade
679	26+90.64	88.31 Lt	328537.00	368684.03	Found 5/8" Rebar 0.2' below grade
623	26+94.90	0.04 Rt	328466.71	368630.23	Found 1–1/2" Aluminum Cap 0.05' below pavement
624	26+94.95	38.58 Lt	328495.46	368656.02	Found 1–1/2" Aluminum Cap flush with pavement
680	27+34.40	47.13 Lt	328462.59	368695.39	Found 5/8" Rebar 0.5' below grade, bent slightly
23	27+88.29	19.36 Lt	328391.64	368695.58	Set 1–1/8" Copper Survey Marker in sidewalk
681	27+89.47	29.86 Lt	328392.54	368706.14	Found 5/8" Rebar with Yellow Plastic Cap 1.0' below grade
625	28+20.53	0.06 Rt	328355.47	368680.19	Found 1–1/2" Aluminum Cap flush with pavement
626	28+60.58	0.06 Rt	328315.42	368680.31	Found 1–1/2" Aluminum Cap 0.05' above pavement

Horizontal Control – Ridgelake Circle Alignment					
Point	Station	Offset	Northing	Easting	Description
615	–	–	328754.39	368446.58	Found 1–1/2" Aluminum Cap 0.05' below pavement
19	90+34.89	18.40 Rt	328752.34	368486.62	Set 1–1/8" Copper Survey Marker in sidewalk
616	90+76.21	0.00 Rt	328787.13	368515.51	Found 2" Aluminum Cap flush with pavement
639	91+10.31	25.80 Rt	328779.10	368557.52	Found 5/8" Rebar with Yellow Plastic Cap 0.4' below grade, leaning
20	91+42.65	34.30 Rt	328785.81	368590.28	Set 1–1/8" Copper Survey Marker in sidewalk
647	91+74.56	24.82 Lt	328852.95	368592.70	Found 5/8" Rebar with Yellow Plastic Cap 0.3' below grade
617	92+18.51	0.01 Lt	328850.16	368643.10	Found 2" Aluminum Cap flush with pavement
646	–	–	328872.89	368632.09	Found 5/8" Rebar with Yellow Plastic Cap 0.4' below grade, leaning
644	92+19.43	43.75 Lt	328868.71	368682.72	Found 5/8" Rebar with Yellow Plastic Cap flush with ground
643	92+42.26	49.93 Lt	328850.98	368698.38	Found 5/8" Rebar with Yellow Plastic Cap flush with ground
618	92+43.49	0.00 Rt	328827.76	368654.16	Found 2" Aluminum Cap flush with pavement
645	–	–	328829.76	368704.05	Found 5/8" Rebar with Yellow Plastic Cap 0.4' below grade
619	92+83.51	0.03 Rt	328787.74	368654.21	Found 2" Aluminum Cap 0.05' below pavement
642	93+06.56	44.37 Lt	328764.77	368698.65	Found 5/8" Rebar with Yellow Plastic Cap flush with ground
640	93+25.69	26.80 Rt	328745.51	368627.51	Found 5/8" Rebar with Yellow Plastic Cap 0.6' below grade
641	93+33.35	3.49 Lt	328737.91	368657.82	Found 5/8" Rebar with Yellow Plastic Cap 0.4' below grade

Horizontal Control – Image Drive Alignment					
Point	Station	Offset	Northing	Easting	Description
614	53+75.51	0.08 Rt	328852.95	368397.78	Found 1–1/2" Aluminum Cap 0.05' above pavement
615	54+85.49	0.10 Rt	328754.39	368446.58	Found 1–1/2" Aluminum Cap 0.05' below pavement
616	54+86.52	76.21 Lt	328787.13	368515.51	Found 2" Aluminum Cap flush with pavement
19	55+03.41	35.34 Lt	328752.34	368486.62	Set 1–1/8" Copper Survey Marker in sidewalk
639	55+06.38	111.04 Lt	328779.10	368557.52	Found 5/8" Rebar with Yellow Plastic Cap 0.4' below grade
638	56+05.11	34.09 Lt	328645.43	368515.65	Found 5/8" Rebar 0.5' below grade
620	56+56.83	0.12 Rt	328589.10	368485.47	Found 1–1/2" Aluminum Cap 0.05' above pavement
21	57+20.53	34.41 Lt	328525.50	368520.19	Set 1–1/8" Copper Survey Marker in sidewalk
622	57+41.13	43.95 Lt	328504.92	368529.79	Found 1–1/2" Aluminum Cap flush with pavement
621	57+41.16	30.05 Lt	328504.85	368515.89	Found 1–1/2" Aluminum Cap 0.05' above pavement
682	–	–	328474.90	368515.98	Found 2" Aluminum Cap 0.6' below grade

LEGEND

- Existing Aluminum Cap
- Existing Rebar or Iron Pipe
- Control set by CRW
- (500) Control Point Number

RECORD DRAWING

THIS WILL SERVE TO CERTIFY THAT THESE RECORD DRAWINGS ARE A TRUE AND ACCURATE REPRESENTATION OF THE PROJECT AS CONSTRUCTED.

CONTRACTOR: _____

BY: _____

TITLE: _____

DATE: _____

DATA	DRAWN BY	CHECKED BY
BASE	TS	MJ
TOPOGRAPHY	TS	MJ
PROFILE	RB	JK
STORM SEWER	JH	JK
WATER/SANITARY SEWER	MV	JK
GAS	MV	JK
TELEPHONE	MV	JK
ELECTRIC	TK	BM
DESIGN	RB	JK
QUANTITIES	RB	JK
PRELIMINARY/FINAL	RB	JK
MUNICIPAL/STATE	RB	JK
PLAN CHECK		

GRAPHIC 60 30 0 30 60 SCALE

FIELD BOOKS	BM NO.	LOCATION	ELEV.
DESIGN CRW Books 147, 148, & 151	GAAB 66	See page D–24 of the MOA Benchmark Book	238.10
	GAAB 96	See page D–26 of the MOA Benchmark Book	313.83
STAKING			
ASBUILT			
CONTRACTOR	BASIS OF THIS DATUM GAAB 1972 ADJUST		
INSPECTOR			
CONSTRUCTION RECORD	VERTICAL DATUM		

REV	DATE	DESCRIPTION	BY
REVISIONS			

CRW ENGINEERING GROUP, LLC
3940 ARCTIC BLVD. SUITE 300
ANCHORAGE, ALASKA 99503
PHONE: (907) 562–3252
#AECL882–AK
CONSULTANT

STATE OF ALASKA 49TH Michael L. Jokela LS-7839 REGISTERED PROFESSIONAL LAND SURVEYOR
SEAL

MUNICIPALITY OF ANCHORAGE

PROJECT MANAGEMENT AND ENGINEERING DEPARTMENT

14–50 IMAGE DRIVE / REFLECTION DRIVE AREA ROAD RECONSTRUCTION – PHASE 2 ALL

SURVEY CONTROL SHEET

IMAGE DRIVE, RIDGELAKE CIRCLE & DEFIANCE STREET EOP

SCALE HOR. 1"=30' VER. N/A | GRID SW1638, SW1738 | DATE SEPT 2019 | STATUS 65% | SHEET V3 of V4

File: J:\JobsData\10133.00 Image Reflection Area Reconstruction\00 CADD\01 Working Set\02 Survey\03 Survey Control\10133.00 SCS Phase 2.dwg

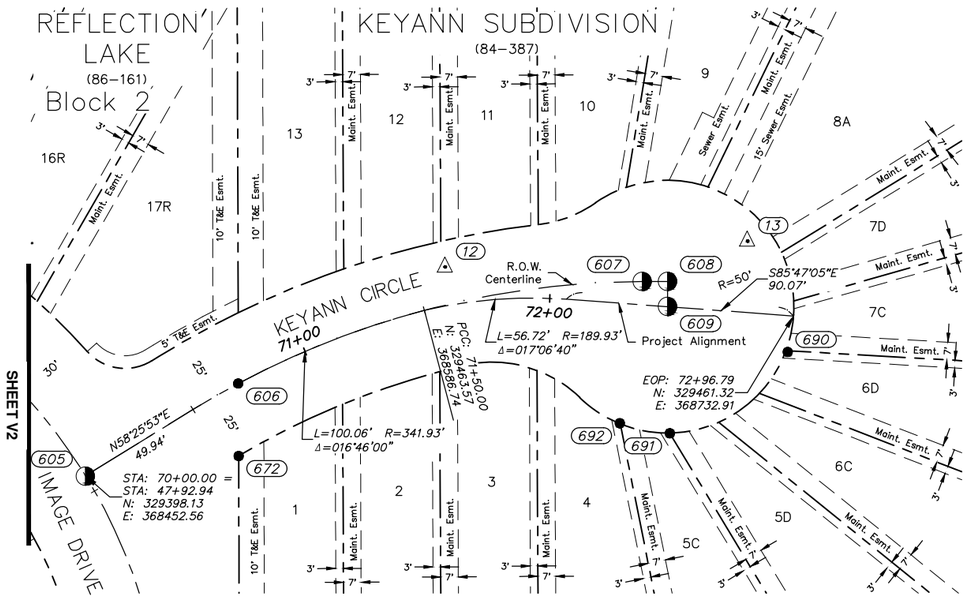

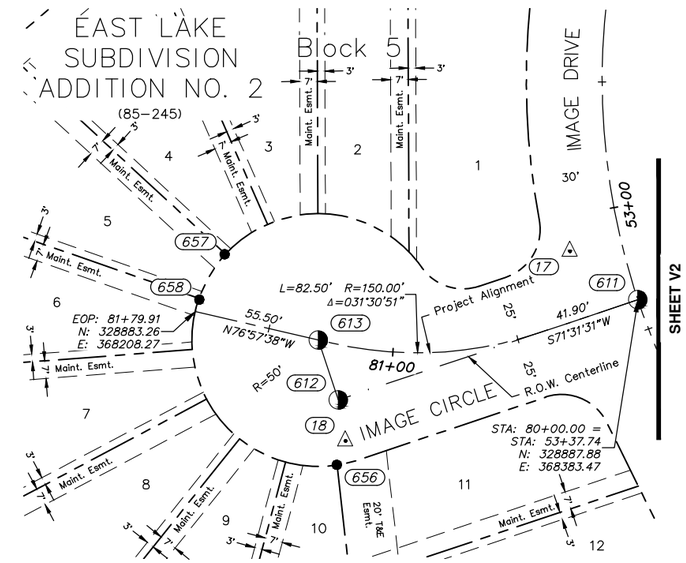

Horizontal Control – Keyann Circle Alignment

Point	Station	Offset	Northing	Easting	Description
605	–	–	329397.92	368452.52	Found 1–1/2" Aluminum Cap flush with pavement
672	70+56.20	25.10 Rt	329405.89	368513.23	Found 1/2" Rebar 1.2' below grade
606	70+70.65	0.00 Lt	329434.59	368513.07	Found 5/8" Rebar 0.05' below pavement
12	71+61.01	15.21 Lt	329480.73	368594.98	Set 1–1/8" Copper Survey Marker in top back of curb
692	72+31.35	47.41 Rt	329418.85	368664.16	Found 5/8" Rebar 0.1' below grade, bent
607	72+36.05	9.20 Lt	329474.96	368673.01	Found 1–1/2" Aluminum Cap 0.05' above pavement
608	72+46.07	9.99 Lt	329475.01	368683.06	Found 1–1/2" Aluminum Cap 0.05' above pavement
609	72+46.81	0.04 Lt	329465.03	368683.06	Found 1–1/2" Aluminum Cap 0.1' below pavement
691	72+51.40	49.93 Rt	329414.86	368683.97	Found 5/8" Rebar 0.2' below grade, bent
13	72+76.48	28.25 Lt	329490.99	368714.73	Set 1–1/8" Copper Survey Marker in top back of curb
690	72+95.54	14.41 Rt	329447.04	368730.60	Found 1/2" Rebar 0.1' below grade

Horizontal Control – Image Circle Alignment

Point	Station	Offset	Northing	Easting	Description
611	80+00.05	0.02 Rt	328887.88	368383.41	Found 1–1/2" Aluminum Cap flush with pavement
17	80+19.40	26.74 Rt	328907.09	368356.59	Set 1–1/8" Copper Survey Marker in sidewalk
18	81+13.17	37.02 Lt	328832.02	368267.75	Set 1–1/8" Copper Survey Marker in top back of curb
656	81+14.67	46.90 Lt	328822.56	368264.30	Found 5/8" Rebar 0.15' below grade
612	81+17.79	21.54 Lt	328848.21	368264.90	Found 1–1/2" Aluminum Cap flush with pavement
613	81+29.92	0.08 Lt	328871.90	368256.96	Found 1–1/2" Aluminum Cap 0.05' below pavement
657	81+73.71	24.66 Rt	328905.88	368219.88	Found 5/8" Rebar 0.9' below grade
658	81+79.43	4.92 Rt	328887.94	368209.86	Found 5/8" Rebar 1.2' below grade, leaning

LEGEND

- Existing Aluminum Cap
- Existing Rebar or Iron Pipe
- Control set by CRW
- (500) Control Point Number

RECORD DRAWING

THIS WILL SERVE TO CERTIFY THAT THESE RECORD DRAWINGS ARE A TRUE AND ACCURATE REPRESENTATION OF THE PROJECT AS CONSTRUCTED.

CONTRACTOR: _____

BY: _____

TITLE: _____

DATE: _____

DATA	DRAWN BY	CHECKED BY
BASE	TS	MJ
TOPOGRAPHY	TS	MJ
PROFILE	RB	JK
STORM SEWER	JH	JK
WATER/SANITARY SEWER	MV	JK
GAS	MV	JK
TELEPHONE	MV	JK
ELECTRIC	TK	BM
DESIGN	RB	JK
QUANTITIES	RB	JK
PRELIMINARY/FINAL	RB	JK
MUNICIPAL/STATE	RB	JK

PLAN CHECK

GRAPHIC SCALE 60 30 0 30 60

FIELD BOOKS	BM NO.	LOCATION	ELEV.
DESIGN CRW Books 147, 148, & 151	GAAB 66	See page D–24 of the MOA Benchmark Book	238.10
	GAAB 96	See page D–26 of the MOA Benchmark Book	313.83
STAKING			
ASBUILT			
CONTRACTOR	BASIS OF THIS DATUM GAAB 1972 ADJUST		
INSPECTOR			

CONSTRUCTION RECORD — VERTICAL DATUM

REV	DATE	DESCRIPTION	BY

REVISIONS

CRW ENGINEERING GROUP, LLC
3940 ARCTIC BLVD. SUITE 300
ANCHORAGE, ALASKA 99503
PHONE: (907) 562–3252
#AECL882–AK

CONSULTANT

STATE OF ALASKA 49TH Michael L. Jokela LS-7839 REGISTERED PROFESSIONAL LAND SURVEYOR

SEAL

MUNICIPALITY OF ANCHORAGE

PROJECT MANAGEMENT AND ENGINEERING DEPARTMENT

14–50 IMAGE DRIVE / REFLECTION DRIVE AREA ROAD RECONSTRUCTION – PHASE 2 ALL

SURVEY CONTROL SHEET

KEYANN CIRCLE & IMAGE CIRCLE

SCALE HOR. 1"=30' VER. N/A | GRID SW1638, SW1738 | DATE SEPT 2019 | STATUS 65% | SHEET V4 of V4

File: J:\JobsData\10133.00 Image Reflection Area Reconstruction\00 CADD\01 Working Set\02 Survey\03 Survey Control\10133.00 SCS Phase 2 Sheet V4.dwg

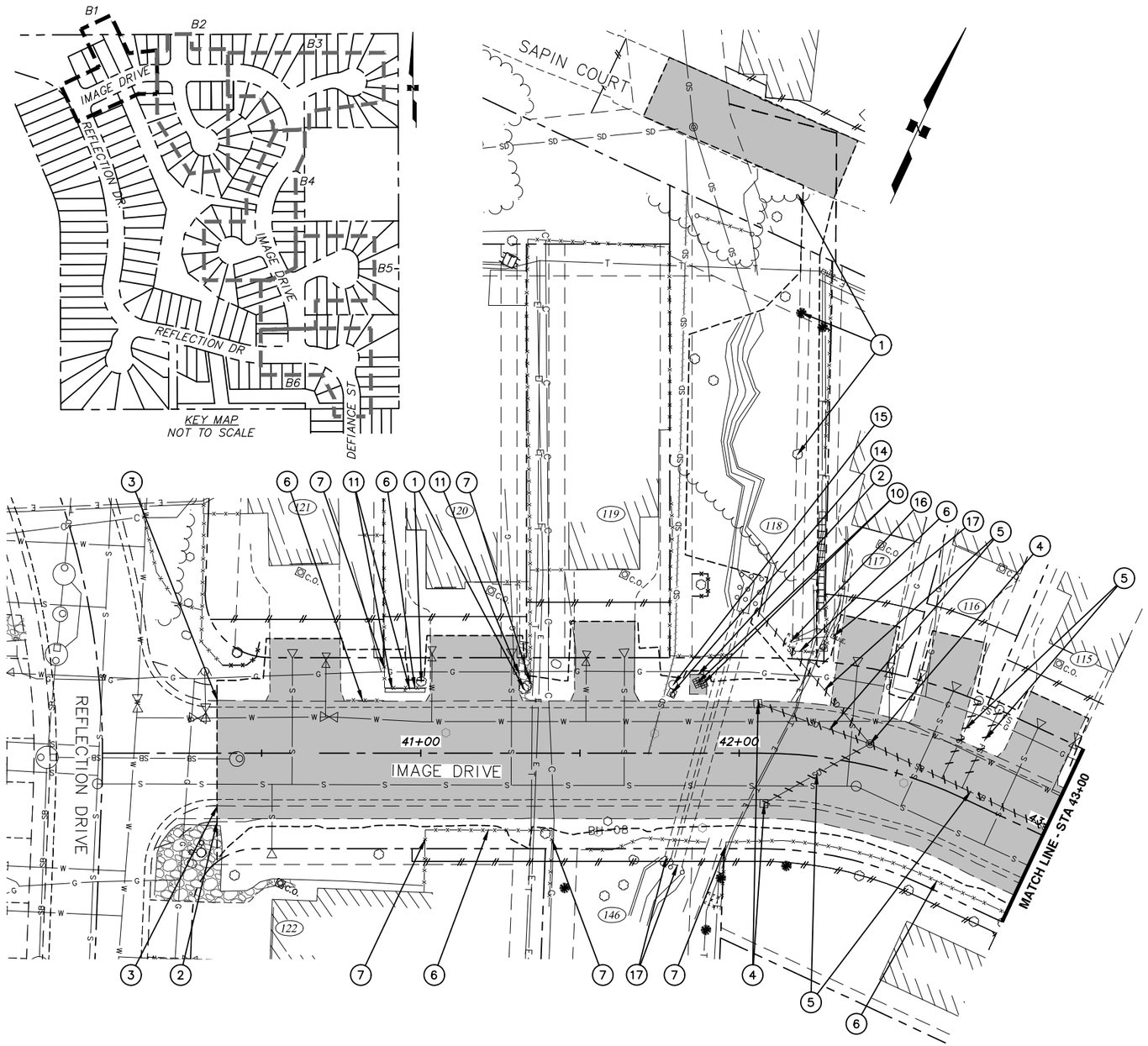

LEGEND

1. CLEAR AND GRUB WITHIN LIMITS OF DISTURBANCE AFTER CLEARING LIMITS HAVE BEEN APPROVED AND AFTER TEMPORARY TREE PROTECTION FENCES (SECTION 75.12) HAVE BEEN ESTABLISHED AS SHOWN, OR AS DIRECTED BY THE ENGINEER IN THE FIELD (SECTION 20.04). NOT ALL TREES, SHRUBS, AND VEGETATION ARE SPECIFICALLY CALLED OUT OR SHOWN.
2. REMOVE SIDEWALK OR CONCRETE APRON (SECTION 20.07).
3. REMOVE CURB AND GUTTER (SECTION 20.08).
4. REMOVE MANHOLE, CATCH BASIN, OR CLEANOUT (SECTION 55.11).
5. REMOVE PIPE (SECTION 70.07).
6. REMOVE AND RESET FENCE (SECTION 70.08)
7. REMOVE FENCE (SECTION 70.08).
10. RELOCATE MAILBOX OR CLUSTER MAILBOX UNIT (SECTION 70.17).
11. REMOVAL/DISPOSAL AND/OR SALVAGE/INSTALLATION OF OBSTRUCTIONS (SECTION 70.22) SEE NOTE 3.
14. REMOVE JUNCTION BOX (SECTION 80.08).
15. REMOVE LUMINAIRE POLE (SECTION 80.28).
16. REMOVE LOAD CENTER (SECTION 80.28).
17. PROTECT IN PLACE

REMOVAL OF PAVEMENT (SECTION 20.09) AND/OR, SIDEWALK, CURB & GUTTER, AND CONCRETE, AS SHOWN & NOTED IN SUMMARY TABLES.

APPROXIMATE LIMITS OF DISTURBANCE

REMOVE PIPE

TEMPORARY TREE PROTECTION FENCE (SECTION 75.12), LOCATIONS TO BE FIELD VERIFIED, SEE DETAIL 1 ON SHEET B10.

NOTES:

1. SEE SUMMARY TABLE SHEETS B7 – B11 FOR STATION AND OFFSET OF DEMOLITION ITEMS.
2. SEE ROADWAY IMPROVEMENTS (R) SHEETS FOR DRIVEWAY RECONSTRUCTION LIMITS.
3. EXISTING PRIVATE LANDSCAPING FEATURES SUCH AS RETAINING WALLS, TIMBERS, PLANTERS, LANDSCAPING ROCKS, ETC. ARE LOCATED IN THE ROW AND/OR ON PROPERTY WITHIN THE WORK ZONE. CONTRACTOR SHALL REMOVE ITEMS AS DESCRIBED IN THESE DEMOLITION PLANS OR AS DIRECTED BY THE ENGINEER IN THE FIELD. IN EACH CASE, THE CONTRACTOR AND THE ENGINEER SHALL COORDINATE WITH PROPERTY OWNER. IF PROPERTY OWNER WISHES TO SALVAGE ITEMS THAT ARE CURRENTLY IN ROW AND NOT ALLOWED TO BE REINSTALLED THERE, CONTRACTOR SHALL PLACE ITEMS ON OWNER'S PROPERTY. IF OWNER DOES NOT WANT ITEMS PLACED ON PROPERTY, CONTRACTOR SHALL DISPOSE OF REMOVED ITEMS AT A CONTRACTOR–SUPPLIED LOCATION. MATERIALS TO BE REINSTALLED ON PROPERTY OR ALLOWED TO BE REINSTALLED IN THE ROW SHALL BE CAREFULLY REMOVED, PROTECTED AND STORED BY THE CONTRACTOR UNTIL READY TO BE REINSTALLED. IT SHALL BE THE CONTRACTOR'S SOLE RESPONSIBILITY TO NOTIFY THE ENGINEER OF EXISTING DAMAGE TO ITEMS TO BE SALVAGED PRIOR TO REMOVAL. UNLESS OTHERWISE DIRECTED BY THE ENGINEER IN WRITING PRIOR TO REMOVAL, IF ANY SALVAGED ITEMS ARE DAMAGED, THE CONTRACTOR SHALL REPLACE THOSE ITEMS IN KIND INCLUDING MATCHING TYPE, COLOR, AND MANUFACTURER.

RECORD DRAWING

1. DATA PROVIDED BY: _____ TITLE: _____
   THIS WILL SERVE TO CERTIFY THAT THESE RECORD DRAWINGS ARE A TRUE AND ACCURATE REPRESENTATION OF THE PROJECT AS CONSTRUCTED.
   CONTRACTOR: _____
   BY: _____ TITLE: _____ DATE: _____
2. DATA TRANSFERRED BY: _____ TITLE: _____
   COMPANY: _____ DATE: _____
3. BASED ON PERIODIC FIELD OBSERVATIONS BY THE ENGINEER (OR AN INDIVIDUAL UNDER HIS/HER DIRECT SUPERVISION), THE CONTRACTOR–PROVIDED DATA APPEARS TO REPRESENT THE PROJECT AS CONSTRUCTED.
   DATA TRANSFER CHECKED BY: _____ TITLE: _____
   COMPANY: _____ DATE: _____
   BY: _____

DATA	DRAWN BY	CHECKED BY
BASE	TS	MJ
TOPOGRAPHY	TS	MJ
PROFILE	RB	JK
STORM SEWER	JH	JK
WATER/SANITARY SEWER	MV	JK
GAS	MV	JK
TELEPHONE	MV	JK
ELECTRIC	TK	BM
DESIGN	RB	JK
QUANTITIES	RB	JK
PRELIMINARY/FINAL	RB	JK
MUNICIPAL/STATE	RB	JK

PLAN CHECK

GRAPHIC 40 20 0 20 40 SCALE

FIELD BOOKS	BM NO.	LOCATION	ELEV.
DESIGN CRW Books 147, 148, & 151	GAAB 66	See page D–24 of the MOA Benchmark Book	238.10
	GAAB 96	See page D–26 of the MOA Benchmark Book	313.83
STAKING			
ASBUILT			
CONTRACTOR	BASIS OF THIS DATUM GAAB 1972 ADJUST		
INSPECTOR			

CONSTRUCTION RECORD

VERTICAL DATUM

REV	DATE	DESCRIPTION	BY

REVISIONS

CRW ENGINEERING GROUP, LLC
3940 ARCTIC BLVD. SUITE 300
ANCHORAGE, ALASKA 99503
PHONE: (907) 562–3252
#AECL882–AK

CONSULTANT

STATE OF ALASKA 49TH Justin T. Keene CE-11775 REGISTERED PROFESSIONAL ENGINEER

SEAL

MUNICIPALITY OF ANCHORAGE

PROJECT MANAGEMENT AND ENGINEERING DEPARTMENT

14–50 IMAGE DRIVE / REFLECTION DRIVE AREA ROAD RECONSTRUCTION – PHASE 2 ALL

DEMOLITION PLAN

BOP TO STA 43+00

SCALE HOR. 1"=20' VER. N/A | GRID SW1638, SW1738 | DATE SEPT 2019 | STATUS 65% | SHEET B1 of B11

File: J:\JobsData\10133.00 Image Reflection Area Reconstruction\00 CADD\01 Working Set\01 Civil\Phase 2\10133.00 Demolition Plan – Phase 2.dwg

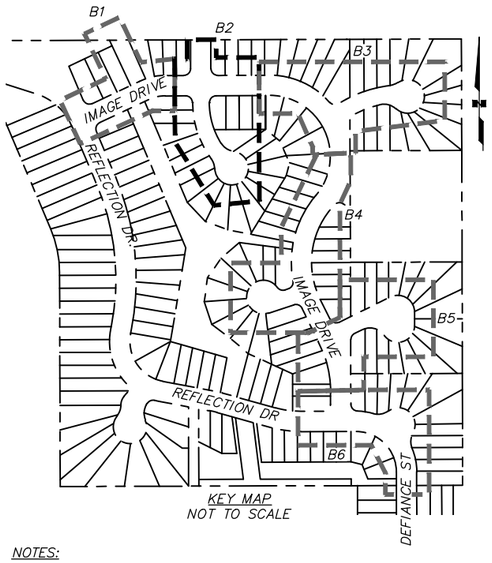

KEY MAP
NOT TO SCALE

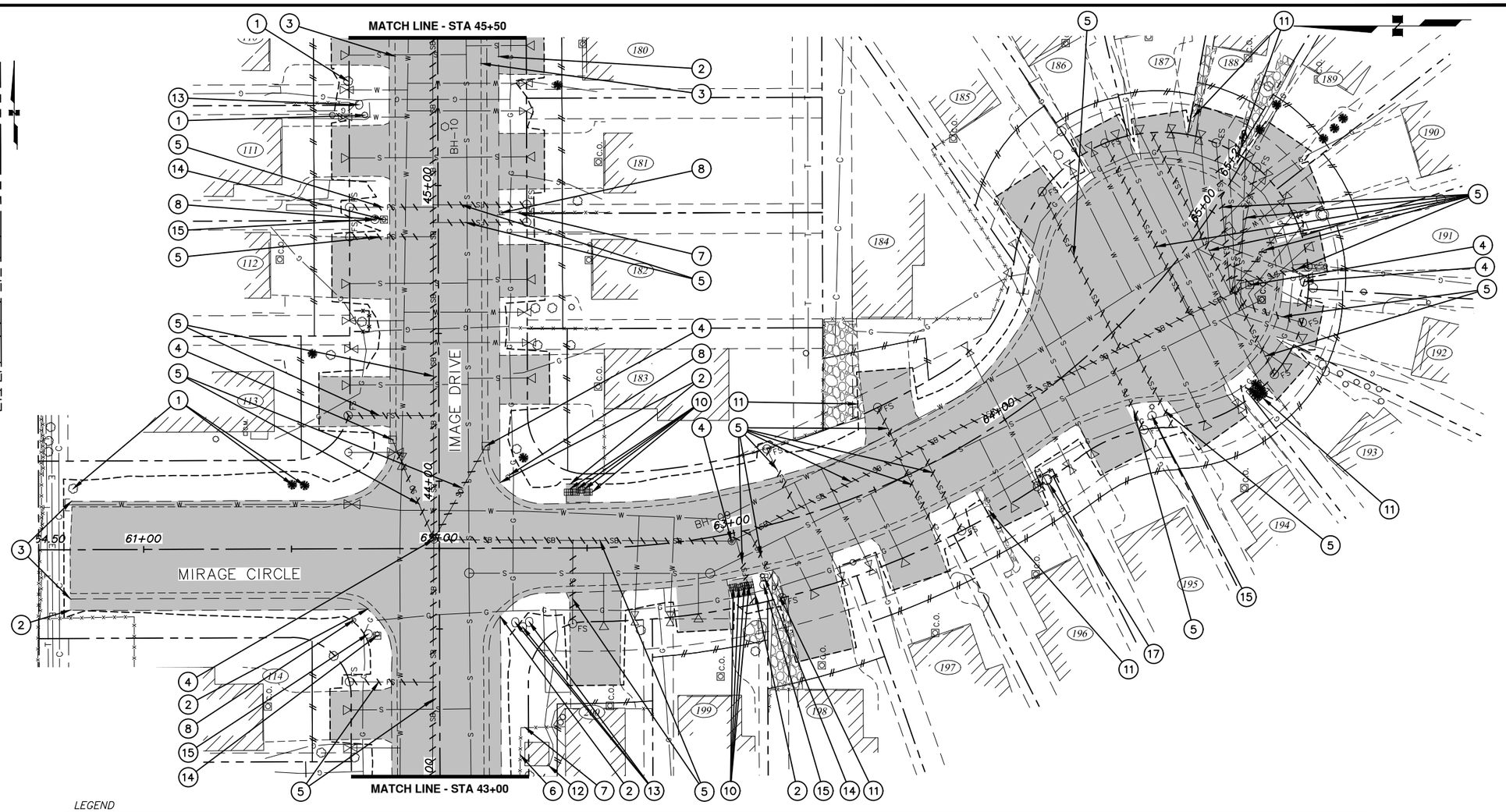

NOTES:

1. SEE SUMMARY TABLE SHEETS B7 – B10 FOR STATION AND OFFSET OF DEMOLITION ITEMS.
2. SEE ROADWAY IMPROVEMENTS (R) SHEETS FOR DRIVEWAY RECONSTRUCTION LIMITS.
3. EXISTING PRIVATE LANDSCAPING FEATURES SUCH AS RETAINING WALLS, TIMBERS, PLANTERS, LANDSCAPING ROCKS, ETC. ARE LOCATED IN THE ROW AND/OR ON PROPERTY WITHIN THE WORK ZONE. CONTRACTOR SHALL REMOVE ITEMS AS DESCRIBED IN THESE DEMOLITION PLANS OR AS DIRECTED BY THE ENGINEER IN THE FIELD. IN EACH CASE, THE CONTRACTOR AND THE ENGINEER SHALL COORDINATE WITH PROPERTY OWNER. IF PROPERTY OWNER WISHES TO SALVAGE ITEMS THAT ARE CURRENTLY IN ROW AND NOT ALLOWED TO BE REINSTALLED THERE, CONTRACTOR SHALL PLACE ITEMS ON OWNER'S PROPERTY. IF OWNER DOES NOT WANT ITEMS PLACED ON PROPERTY, CONTRACTOR SHALL DISPOSE OF REMOVED ITEMS AT A CONTRACTOR–SUPPLIED LOCATION. MATERIALS TO BE REINSTALLED ON PROPERTY OR ALLOWED TO BE REINSTALLED IN THE ROW SHALL BE CAREFULLY REMOVED, PROTECTED AND STORED BY THE CONTRACTOR UNTIL READY TO BE REINSTALLED. IT SHALL BE THE CONTRACTOR'S SOLE RESPONSIBILITY TO NOTIFY THE ENGINEER OF EXISTING DAMAGE TO ITEMS TO BE SALVAGED PRIOR TO REMOVAL. UNLESS OTHERWISE DIRECTED BY THE ENGINEER IN WRITING PRIOR TO REMOVAL, IF ANY SALVAGED ITEMS ARE DAMAGED, THE CONTRACTOR SHALL REPLACE THOSE ITEMS IN KIND INCLUDING MATCHING TYPE, COLOR, AND MANUFACTURER.

LEGEND

1. CLEAR AND GRUB WITHIN LIMITS OF DISTURBANCE AFTER CLEARING LIMITS HAVE BEEN APPROVED AND AFTER TEMPORARY TREE PROTECTION FENCES (SECTION 75.12) HAVE BEEN ESTABLISHED AS SHOWN, OR AS DIRECTED BY THE ENGINEER IN THE FIELD (SECTION 20.04). NOT ALL TREES, SHRUBS, AND VEGETATION ARE SPECIFICALLY CALLED OUT OR SHOWN.
2. REMOVE SIDEWALK OR CONCRETE APRON (SECTION 20.07).
3. REMOVE CURB AND GUTTER (SECTION 20.08).
4. REMOVE MANHOLE, CATCH BASIN, OR CLEANOUT (SECTION 55.11).
5. REMOVE PIPE (SECTION 70.07).
6. REMOVE AND RESET FENCE (SECTION 70.08)
7. REMOVE FENCE (SECTION 70.08).
8. REMOVE AND SALVAGE SIGN. THIS WORK SHALL BE INCIDENTAL TO THE BID ITEM STANDARD SIGNS (SECTION 70.11).
10. RELOCATE MAILBOX OR CLUSTER MAILBOX UNIT (SECTION 70.17).
11. REMOVAL/DISPOSAL AND/OR SALVAGE/INSTALLATION OF OBSTRUCTIONS (SECTION 70.22), SEE NOTE 3.
12. REMOVE AND RELOCATE SHED (SECTION 70.23).
13. SALVAGE AND RELOCATE EXISTING BOULDERS OR DISPOSE OF BOULDERS AS DIRECTED IN THE FIELD BY ENGINEER (SECTION 75.11).
14. REMOVE JUNCTION BOX (SECTION 80.08).
15. REMOVE LUMINAIRE POLE (SECTION 80.28).
17. PROTECT IN PLACE

REMOVAL OF PAVEMENT (SECTION 20.09) AND/OR, SIDEWALK, CURB & GUTTER, AND CONCRETE, AS SHOWN & NOTED IN SUMMARY TABLES.

APPROXIMATE LIMITS OF DISTURBANCE

REMOVE PIPE

TEMPORARY TREE PROTECTION FENCE (SECTION 75.12), LOCATIONS TO BE FIELD VERIFIED, SEE DETAIL 1 ON SHEET B10 FOR FENCE DETAIL.

RECORD DRAWING
1. DATA PROVIDED BY: _____ TITLE: _____
THIS WILL SERVE TO CERTIFY THAT THESE RECORD DRAWINGS ARE A TRUE AND ACCURATE REPRESENTATION OF THE PROJECT AS CONSTRUCTED.
CONTRACTOR: _____
BY: _____ TITLE: _____ DATE: _____
2. DATA TRANSFERRED BY: _____ TITLE: _____
COMPANY: _____ DATE: _____
3. BASED ON PERIODIC FIELD OBSERVATIONS BY THE ENGINEER (OR AN INDIVIDUAL UNDER HIS/HER DIRECT SUPERVISION), THE CONTRACTOR–PROVIDED DATA APPEARS TO REPRESENT THE PROJECT AS CONSTRUCTED.
DATA TRANSFER CHECKED BY: _____ TITLE: _____
COMPANY: _____ DATE: _____
BY: _____

DATA	DRAWN BY	CHECKED BY
BASE	TS	MJ
TOPOGRAPHY	TS	MJ
PROFILE	RB	JK
STORM SEWER	JH	JK
WATER/SANITARY SEWER	MV	JK
GAS	MV	JK
TELEPHONE	MV	JK
ELECTRIC	TK	BM
DESIGN	RB	JK
QUANTITIES	RB	JK
PRELIMINARY/FINAL	RB	JK
MUNICIPAL/STATE	RB	JK

PLAN CHECK

GRAPHIC 40 20 0 20 40 SCALE

FIELD BOOKS	BM NO.	LOCATION	ELEV.
DESIGN CRW Books 147, 148, & 151	GAAB 66	See page D–24 of the MOA Benchmark Book	238.10
	GAAB 96	See page D–26 of the MOA Benchmark Book	313.83
STAKING			
ASBUILT			
CONTRACTOR	BASIS OF THIS DATUM GAAB 1972 ADJUST		
INSPECTOR			

CONSTRUCTION RECORD

VERTICAL DATUM

REV	DATE	DESCRIPTION	BY

REVISIONS

CRW ENGINEERING GROUP, LLC
3940 ARCTIC BLVD. SUITE 300
ANCHORAGE, ALASKA 99503
PHONE: (907) 562–3252
#AECL882–AK

CONSULTANT

STATE OF ALASKA 49 TH
Justin T. Keene
CE-11775
REGISTERED PROFESSIONAL ENGINEER

SEAL

MUNICIPALITY OF ANCHORAGE

PROJECT MANAGEMENT AND ENGINEERING DEPARTMENT

14–50 IMAGE DRIVE / REFLECTION DRIVE AREA ROAD RECONSTRUCTION – PHASE 2 ALL

DEMOLITION PLAN

STA 43+00 TO STA 45+50
AND MIRAGE CIRCLE

SCALE HOR. 1"=20' VER. N/A | GRID SW1638, SW1738 | DATE SEPT 2019 | STATUS 65% | SHEET B2 of B11

File: J:\JobsData\10133.00 Image Reflection Area Reconstruction\00 CADD\01 Working Set\01 Civil\Phase 2\10133.00 Demolition Plan – Phase 2.dwg

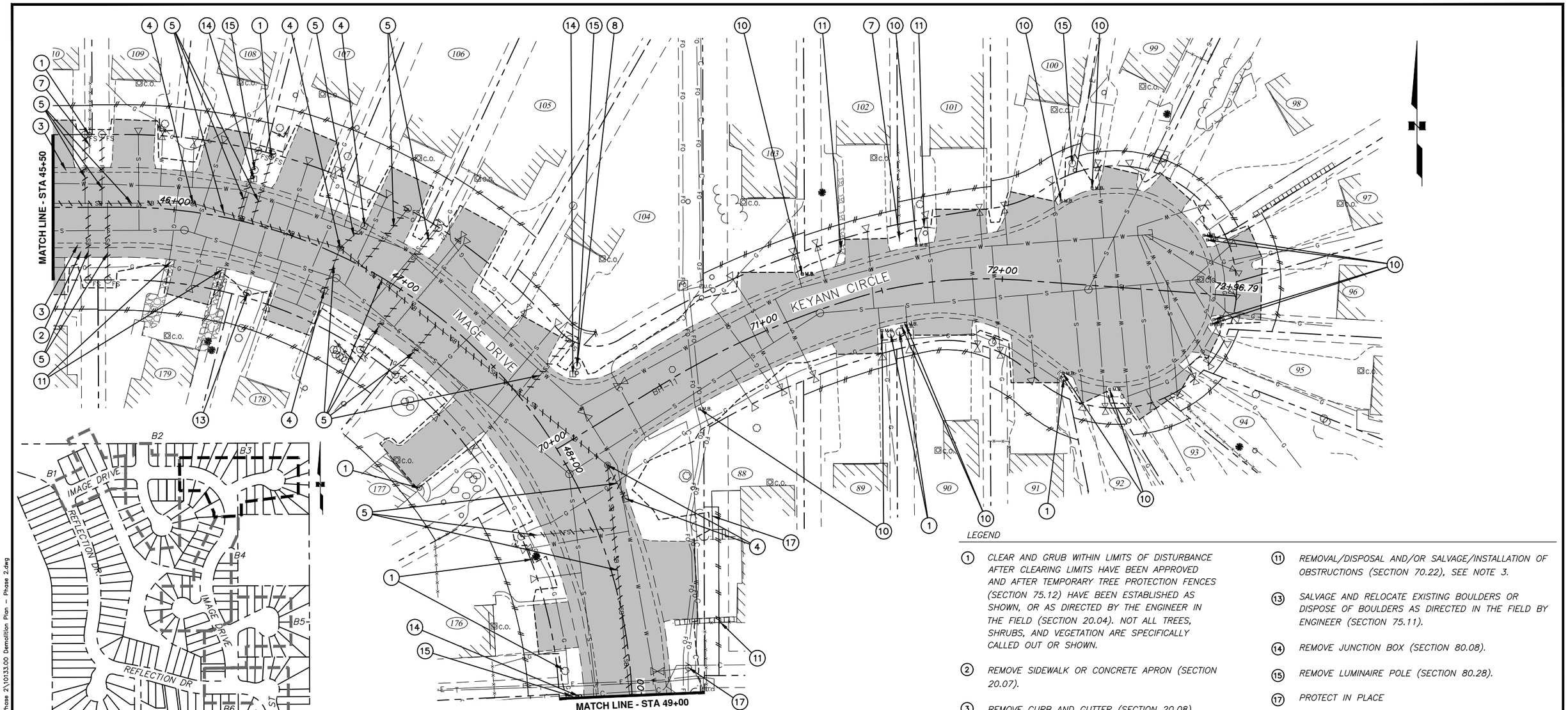

LEGEND

1. CLEAR AND GRUB WITHIN LIMITS OF DISTURBANCE AFTER CLEARING LIMITS HAVE BEEN APPROVED AND AFTER TEMPORARY TREE PROTECTION FENCES (SECTION 75.12) HAVE BEEN ESTABLISHED AS SHOWN, OR AS DIRECTED BY THE ENGINEER IN THE FIELD (SECTION 20.04). NOT ALL TREES, SHRUBS, AND VEGETATION ARE SPECIFICALLY CALLED OUT OR SHOWN.
2. REMOVE SIDEWALK OR CONCRETE APRON (SECTION 20.07).
3. REMOVE CURB AND GUTTER (SECTION 20.08).
4. REMOVE MANHOLE, CATCH BASIN, OR CLEANOUT (SECTION 55.11).
5. REMOVE PIPE (SECTION 70.07).
7. REMOVE FENCE (SECTION 70.08).
8. REMOVE AND SALVAGE SIGN. THIS WORK SHALL BE INCIDENTAL TO THE BID ITEM STANDARD SIGNS (SECTION 70.11).
10. RELOCATE MAILBOX OR CLUSTER MAILBOX UNIT (SECTION 70.17).
11. REMOVAL/DISPOSAL AND/OR SALVAGE/INSTALLATION OF OBSTRUCTIONS (SECTION 70.22), SEE NOTE 3.
13. SALVAGE AND RELOCATE EXISTING BOULDERS OR DISPOSE OF BOULDERS AS DIRECTED IN THE FIELD BY ENGINEER (SECTION 75.11).
14. REMOVE JUNCTION BOX (SECTION 80.08).
15. REMOVE LUMINAIRE POLE (SECTION 80.28).
17. PROTECT IN PLACE

REMOVAL OF PAVEMENT (SECTION 20.09) AND/OR, SIDEWALK, CURB & GUTTER, AND CONCRETE, AS SHOWN & NOTED IN SUMMARY TABLES.

APPROXIMATE LIMITS OF DISTURBANCE

REMOVE PIPE

TEMPORARY TREE PROTECTION FENCE (SECTION 75.12), LOCATIONS TO BE FIELD VERIFIED, SEE DETAIL 1 ON SHEET B10 FOR FENCE DETAIL.

NOTES:

1. SEE SUMMARY TABLE SHEETS B7 – B10 FOR STATION AND OFFSET OF DEMOLITION ITEMS.
2. SEE ROADWAY IMPROVEMENTS (R) SHEETS FOR DRIVEWAY RECONSTRUCTION LIMITS.
3. EXISTING PRIVATE LANDSCAPING FEATURES SUCH AS RETAINING WALLS, TIMBERS, PLANTERS, LANDSCAPING ROCKS, ETC. ARE LOCATED IN THE ROW AND/OR ON PROPERTY WITHIN THE WORK ZONE. CONTRACTOR SHALL REMOVE ITEMS AS DESCRIBED IN THESE DEMOLITION PLANS OR AS DIRECTED BY THE ENGINEER IN THE FIELD. IN EACH CASE, THE CONTRACTOR AND THE ENGINEER SHALL COORDINATE WITH PROPERTY OWNER. IF PROPERTY OWNER WISHES TO SALVAGE ITEMS THAT ARE CURRENTLY IN ROW AND NOT ALLOWED TO BE REINSTALLED THERE, CONTRACTOR SHALL PLACE ITEMS ON OWNER'S PROPERTY. IF OWNER DOES NOT WANT ITEMS PLACED ON PROPERTY, CONTRACTOR SHALL DISPOSE OF REMOVED ITEMS AT A CONTRACTOR–SUPPLIED LOCATION. MATERIALS TO BE REINSTALLED ON PROPERTY OR ALLOWED TO BE REINSTALLED IN THE ROW SHALL BE CAREFULLY REMOVED, PROTECTED AND STORED BY THE CONTRACTOR UNTIL READY TO BE REINSTALLED. IT SHALL BE THE CONTRACTOR'S SOLE RESPONSIBILITY TO NOTIFY THE ENGINEER OF EXISTING DAMAGE TO ITEMS TO BE SALVAGED PRIOR TO REMOVAL. UNLESS OTHERWISE DIRECTED BY THE ENGINEER IN WRITING PRIOR TO REMOVAL, IF ANY SALVAGED ITEMS ARE DAMAGED, THE CONTRACTOR SHALL REPLACE THOSE ITEMS IN KIND INCLUDING MATCHING TYPE, COLOR, AND MANUFACTURER.

RECORD DRAWING

1. DATA PROVIDED BY: _____ TITLE: _____
   THIS WILL SERVE TO CERTIFY THAT THESE RECORD DRAWINGS ARE A TRUE AND ACCURATE REPRESENTATION OF THE PROJECT AS CONSTRUCTED.
   CONTRACTOR: _____
   BY: _____ TITLE: _____ DATE: _____
2. DATA TRANSFERRED BY: _____ TITLE: _____
   COMPANY: _____ DATE: _____
3. BASED ON PERIODIC FIELD OBSERVATIONS BY THE ENGINEER (OR AN INDIVIDUAL UNDER HIS/HER DIRECT SUPERVISION), THE CONTRACTOR–PROVIDED DATA APPEARS TO REPRESENT THE PROJECT AS CONSTRUCTED.
   DATA TRANSFER CHECKED BY: _____ TITLE: _____
   COMPANY: _____ DATE: _____
   BY: _____

DATA	DRAWN BY	CHECKED BY
BASE	TS	MJ
TOPOGRAPHY	TS	MJ
PROFILE	RB	JK
STORM SEWER	JH	JK
WATER/SANITARY SEWER	MV	JK
GAS	MV	JK
TELEPHONE	MV	JK
ELECTRIC	TK	BM
DESIGN	RB	JK
QUANTITIES	RB	JK
PRELIMINARY/FINAL	RB	JK
MUNICIPAL/STATE	RB	JK

PLAN CHECK

GRAPHIC SCALE 40 20 0 20 40

FIELD BOOKS	BM NO.	LOCATION	ELEV.
DESIGN CRW Books 147, 148, & 151	GAAB 66	See page D–24 of the MOA Benchmark Book	238.10
	GAAB 96	See page D–26 of the MOA Benchmark Book	313.83
STAKING			
ASBUILT			
CONTRACTOR	BASIS OF THIS DATUM GAAB 1972 ADJUST		
INSPECTOR			

CONSTRUCTION RECORD — VERTICAL DATUM

REV	DATE	DESCRIPTION	BY

REVISIONS

CRW ENGINEERING GROUP, LLC
3940 ARCTIC BLVD. SUITE 300
ANCHORAGE, ALASKA 99503
PHONE: (907) 562–3252
#ACL582–AK

CONSULTANT

STATE OF ALASKA 49TH Justin T. Keene CE-11775 REGISTERED PROFESSIONAL ENGINEER

SEAL

MUNICIPALITY OF ANCHORAGE

PROJECT MANAGEMENT AND ENGINEERING DEPARTMENT

14–50 IMAGE DRIVE / REFLECTION DRIVE AREA ROAD RECONSTRUCTION – PHASE 2 ALL

DEMOLITION PLAN

STA 45+50 TO STA 49+00
AND KEYANN CIRCLE

SCALE HOR. 1"=20' VER. N/A | GRID SW1638, SW1738 | DATE SEPT 2019 | STATUS 65% | SHEET B3 of B11

File:J:\JobsData\10133.00 Image Reflection Area Reconstruction\00 CADD\01 Working Set\01 Civil\Phase 2\10133.00 Demolition Plan – Phase 2.dwg

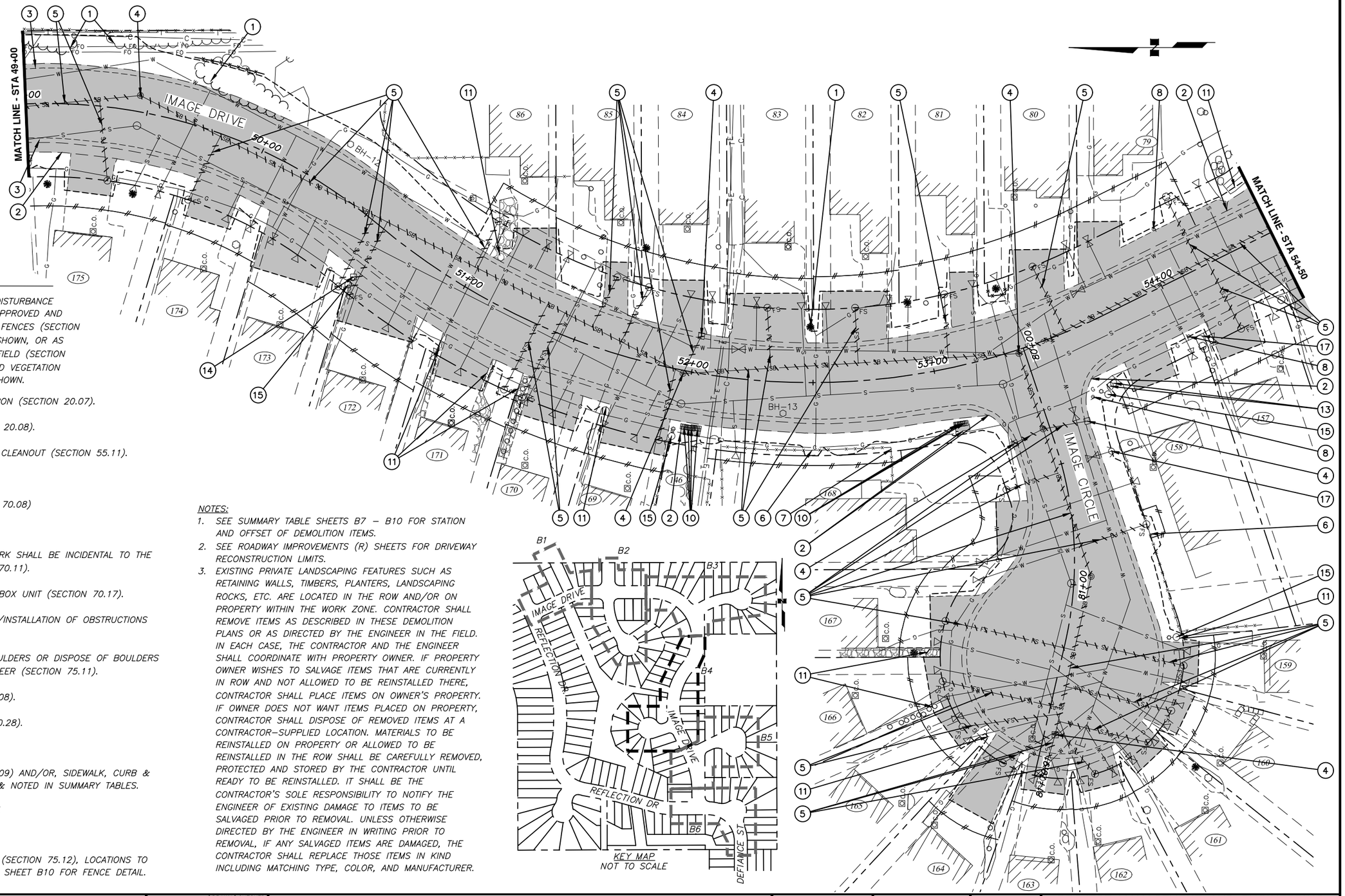

KEY MAP
NOT TO SCALE

LEGEND

1. CLEAR AND GRUB WITHIN LIMITS OF DISTURBANCE AFTER CLEARING LIMITS HAVE BEEN APPROVED AND AFTER TEMPORARY TREE PROTECTION FENCES (SECTION 75.12) HAVE BEEN ESTABLISHED AS SHOWN, OR AS DIRECTED BY THE ENGINEER IN THE FIELD (SECTION 20.04). NOT ALL TREES, SHRUBS, AND VEGETATION ARE SPECIFICALLY CALLED OUT OR SHOWN.
2. REMOVE SIDEWALK OR CONCRETE APRON (SECTION 20.07).
3. REMOVE CURB AND GUTTER (SECTION 20.08).
4. REMOVE MANHOLE, CATCH BASIN, OR CLEANOUT (SECTION 55.11).
5. REMOVE PIPE (SECTION 70.07).
6. REMOVE AND RESET FENCE (SECTION 70.08)
7. REMOVE FENCE (SECTION 70.08).
8. REMOVE AND SALVAGE SIGN. THIS WORK SHALL BE INCIDENTAL TO THE BID ITEM STANDARD SIGNS (SECTION 70.11).
10. RELOCATE MAILBOX OR CLUSTER MAILBOX UNIT (SECTION 70.17).
11. REMOVAL/DISPOSAL AND/OR SALVAGE/INSTALLATION OF OBSTRUCTIONS (SECTION 70.22), SEE NOTE 3.
13. SALVAGE AND RELOCATE EXISTING BOULDERS OR DISPOSE OF BOULDERS AS DIRECTED IN THE FIELD BY ENGINEER (SECTION 75.11).
14. REMOVE JUNCTION BOX (SECTION 80.08).
15. REMOVE LUMINAIRE POLE (SECTION 80.28).
17. PROTECT IN PLACE

REMOVAL OF PAVEMENT (SECTION 20.09) AND/OR, SIDEWALK, CURB & GUTTER, AND CONCRETE, AS SHOWN & NOTED IN SUMMARY TABLES.

APPROXIMATE LIMITS OF DISTURBANCE

REMOVE PIPE

TEMPORARY TREE PROTECTION FENCE (SECTION 75.12), LOCATIONS TO BE FIELD VERIFIED, SEE DETAIL 1 ON SHEET B10 FOR FENCE DETAIL.

NOTES:

1. SEE SUMMARY TABLE SHEETS B7 – B10 FOR STATION AND OFFSET OF DEMOLITION ITEMS.
2. SEE ROADWAY IMPROVEMENTS (R) SHEETS FOR DRIVEWAY RECONSTRUCTION LIMITS.
3. EXISTING PRIVATE LANDSCAPING FEATURES SUCH AS RETAINING WALLS, TIMBERS, PLANTERS, LANDSCAPING ROCKS, ETC. ARE LOCATED IN THE ROW AND/OR ON PROPERTY WITHIN THE WORK ZONE. CONTRACTOR SHALL REMOVE ITEMS AS DESCRIBED IN THESE DEMOLITION PLANS OR AS DIRECTED BY THE ENGINEER IN THE FIELD. IN EACH CASE, THE CONTRACTOR AND THE ENGINEER SHALL COORDINATE WITH PROPERTY OWNER. IF PROPERTY OWNER WISHES TO SALVAGE ITEMS THAT ARE CURRENTLY IN ROW AND NOT ALLOWED TO BE REINSTALLED THERE, CONTRACTOR SHALL PLACE ITEMS ON OWNER'S PROPERTY. IF OWNER DOES NOT WANT ITEMS PLACED ON PROPERTY, CONTRACTOR SHALL DISPOSE OF REMOVED ITEMS AT A CONTRACTOR–SUPPLIED LOCATION. MATERIALS TO BE REINSTALLED ON PROPERTY OR ALLOWED TO BE REINSTALLED IN THE ROW SHALL BE CAREFULLY REMOVED, PROTECTED AND STORED BY THE CONTRACTOR UNTIL READY TO BE REINSTALLED. IT SHALL BE THE CONTRACTOR'S SOLE RESPONSIBILITY TO NOTIFY THE ENGINEER OF EXISTING DAMAGE TO ITEMS TO BE SALVAGED PRIOR TO REMOVAL. UNLESS OTHERWISE DIRECTED BY THE ENGINEER IN WRITING PRIOR TO REMOVAL, IF ANY SALVAGED ITEMS ARE DAMAGED, THE CONTRACTOR SHALL REPLACE THOSE ITEMS IN KIND INCLUDING MATCHING TYPE, COLOR, AND MANUFACTURER.

RECORD DRAWING

1. DATA PROVIDED BY: _____ TITLE: _____
   THIS WILL SERVE TO CERTIFY THAT THESE RECORD DRAWINGS ARE A TRUE AND ACCURATE REPRESENTATION OF THE PROJECT AS CONSTRUCTED.
   CONTRACTOR: _____
   BY: _____ TITLE: _____ DATE: _____
2. DATA TRANSFERRED BY: _____ TITLE: _____
   COMPANY: _____ DATE: _____
3. BASED ON PERIODIC FIELD OBSERVATIONS BY THE ENGINEER (OR AN INDIVIDUAL UNDER HIS/HER DIRECT SUPERVISION), THE CONTRACTOR–PROVIDED DATA APPEARS TO REPRESENT THE PROJECT AS CONSTRUCTED.
   DATA TRANSFER CHECKED BY: _____ TITLE: _____
   COMPANY: _____ DATE: _____
   BY: _____

DATA	DRAWN BY	CHECKED BY
BASE	TS	MJ
TOPOGRAPHY	TS	MJ
PROFILE	RB	JK
STORM SEWER	JH	JK
WATER/SANITARY SEWER	MV	JK
GAS	MV	JK
TELEPHONE	MV	JK
ELECTRIC	TK	BM
DESIGN	RB	JK
QUANTITIES	RB	JK
PRELIMINARY/FINAL	RB	JK
MUNICIPAL/STATE	RB	JK

PLAN CHECK

GRAPHIC 40 20 0 20 40 SCALE

FIELD BOOKS	BM NO.	LOCATION	ELEV.
DESIGN CRW Books 147, 148, & 151	GAAB 66	See page D–24 of the MOA Benchmark Book	238.10
	GAAB 96	See page D–26 of the MOA Benchmark Book	313.83
STAKING			
ASBUILT			
CONTRACTOR	BASIS OF THIS DATUM GAAB 1972 ADJUST		
INSPECTOR			

CONSTRUCTION RECORD

VERTICAL DATUM

REV	DATE	DESCRIPTION	BY

REVISIONS

CRW ENGINEERING GROUP, LLC
3940 ARCTIC BLVD. SUITE 300
ANCHORAGE, ALASKA 99503
PHONE: (907) 562–3252
#AECL882–AK

CONSULTANT

STATE OF ALASKA 49TH
Justin T. Keene
CE-11775
REGISTERED PROFESSIONAL ENGINEER

SEAL

MUNICIPALITY OF ANCHORAGE

PROJECT MANAGEMENT AND ENGINEERING DEPARTMENT

14–50 IMAGE DRIVE / REFLECTION DRIVE AREA ROAD RECONSTRUCTION – PHASE 2 ALL

DEMOLITION PLAN

STA 49+00 TO STA 54+50
AND IMAGE CIRCLE

SCALE HOR. 1"=20' VER. N/A | GRID SW1638, SW1738 | DATE SEPT 2019 | STATUS 65% | SHEET B4 of B11

File: J:\JobsData\10133.00 Image Reflection Area Reconstruction\00 CADD\01 Working Set\01 Civil\Phase 2\10133.00 Demolition Plan – Phase 2.dwg

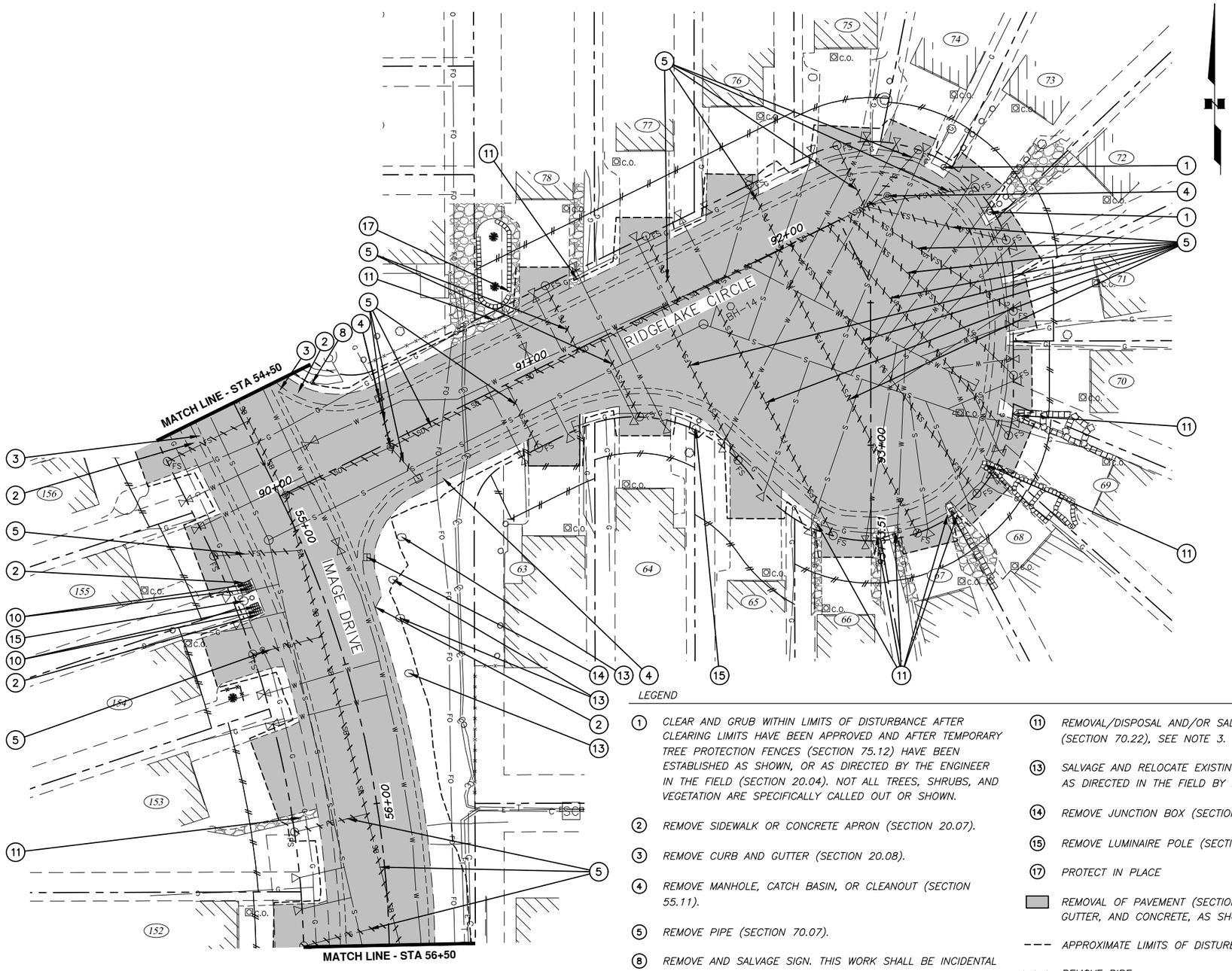

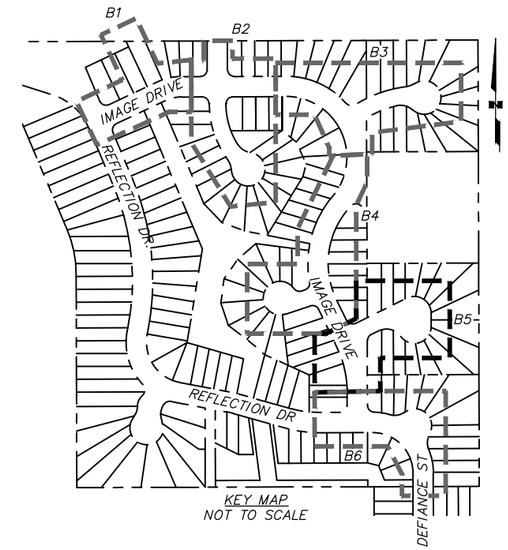

KEY MAP
NOT TO SCALE

NOTES:

1. SEE SUMMARY TABLE SHEETS B7 – B10 FOR STATION AND OFFSET OF DEMOLITION ITEMS.
2. SEE ROADWAY IMPROVEMENTS (R) SHEETS FOR DRIVEWAY RECONSTRUCTION LIMITS.
3. EXISTING PRIVATE LANDSCAPING FEATURES SUCH AS RETAINING WALLS, TIMBERS, PLANTERS, LANDSCAPING ROCKS, ETC. ARE LOCATED IN THE ROW AND/OR ON PROPERTY WITHIN THE WORK ZONE. CONTRACTOR SHALL REMOVE ITEMS AS DESCRIBED IN THESE DEMOLITION PLANS OR AS DIRECTED BY THE ENGINEER IN THE FIELD. IN EACH CASE, THE CONTRACTOR AND THE ENGINEER SHALL COORDINATE WITH PROPERTY OWNER. IF PROPERTY OWNER WISHES TO SALVAGE ITEMS THAT ARE CURRENTLY IN ROW AND NOT ALLOWED TO BE REINSTALLED THERE, CONTRACTOR SHALL PLACE ITEMS ON OWNER'S PROPERTY. IF OWNER DOES NOT WANT ITEMS PLACED ON PROPERTY, CONTRACTOR SHALL DISPOSE OF REMOVED ITEMS AT A CONTRACTOR–SUPPLIED LOCATION. MATERIALS TO BE REINSTALLED ON PROPERTY OR ALLOWED TO BE REINSTALLED IN THE ROW SHALL BE CAREFULLY REMOVED, PROTECTED AND STORED BY THE CONTRACTOR UNTIL READY TO BE REINSTALLED.
IT SHALL BE THE CONTRACTOR'S SOLE RESPONSIBILITY TO NOTIFY THE ENGINEER OF EXISTING DAMAGE TO ITEMS TO BE SALVAGED PRIOR TO REMOVAL. UNLESS OTHERWISE DIRECTED BY THE ENGINEER IN WRITING PRIOR TO REMOVAL, IF ANY SALVAGED ITEMS ARE DAMAGED, THE CONTRACTOR SHALL REPLACE THOSE ITEMS IN KIND INCLUDING MATCHING TYPE, COLOR, AND MANUFACTURER.

LEGEND

1. CLEAR AND GRUB WITHIN LIMITS OF DISTURBANCE AFTER CLEARING LIMITS HAVE BEEN APPROVED AND AFTER TEMPORARY TREE PROTECTION FENCES (SECTION 75.12) HAVE BEEN ESTABLISHED AS SHOWN, OR AS DIRECTED BY THE ENGINEER IN THE FIELD (SECTION 20.04). NOT ALL TREES, SHRUBS, AND VEGETATION ARE SPECIFICALLY CALLED OUT OR SHOWN.
2. REMOVE SIDEWALK OR CONCRETE APRON (SECTION 20.07).
3. REMOVE CURB AND GUTTER (SECTION 20.08).
4. REMOVE MANHOLE, CATCH BASIN, OR CLEANOUT (SECTION 55.11).
5. REMOVE PIPE (SECTION 70.07).
8. REMOVE AND SALVAGE SIGN. THIS WORK SHALL BE INCIDENTAL TO THE BID ITEM STANDARD SIGNS (SECTION 70.11).
10. RELOCATE MAILBOX OR CLUSTER MAILBOX UNIT (SECTION 70.17).
11. REMOVAL/DISPOSAL AND/OR SALVAGE/INSTALLATION OF OBSTRUCTIONS (SECTION 70.22), SEE NOTE 3.
13. SALVAGE AND RELOCATE EXISTING BOULDERS OR DISPOSE OF BOULDERS AS DIRECTED IN THE FIELD BY ENGINEER (SECTION 75.11).
14. REMOVE JUNCTION BOX (SECTION 80.08).
15. REMOVE LUMINAIRE POLE (SECTION 80.28).
17. PROTECT IN PLACE

REMOVAL OF PAVEMENT (SECTION 20.09) AND/OR, SIDEWALK, CURB & GUTTER, AND CONCRETE, AS SHOWN & NOTED IN SUMMARY TABLES.

APPROXIMATE LIMITS OF DISTURBANCE

REMOVE PIPE

TEMPORARY TREE PROTECTION FENCE (SECTION 75.12), LOCATIONS TO BE FIELD VERIFIED, SEE DETAIL 1 ON SHEET B10 FOR FENCE DETAIL.

RECORD DRAWING

1. DATA PROVIDED BY: _____ TITLE: _____
THIS WILL SERVE TO CERTIFY THAT THESE RECORD DRAWINGS ARE A TRUE AND ACCURATE REPRESENTATION OF THE PROJECT AS CONSTRUCTED.
CONTRACTOR: _____
BY: _____ TITLE: _____ DATE: _____
2. DATA TRANSFERRED BY: _____ TITLE: _____
COMPANY: _____ DATE: _____
3. BASED ON PERIODIC FIELD OBSERVATIONS BY THE ENGINEER (OR AN INDIVIDUAL UNDER HIS/HER DIRECT SUPERVISION), THE CONTRACTOR–PROVIDED DATA APPEARS TO REPRESENT THE PROJECT AS CONSTRUCTED.
DATA TRANSFER CHECKED BY: _____ TITLE: _____
COMPANY: _____ DATE: _____
BY: _____

DATA	DRAWN BY	CHECKED BY
BASE	TS	MJ
TOPOGRAPHY	TS	MJ
PROFILE	RB	JK
STORM SEWER	JH	JK
WATER/SANITARY SEWER	MV	JK
GAS	MV	JK
TELEPHONE	MV	JK
ELECTRIC	TK	BM
DESIGN	RB	JK
QUANTITIES	RB	JK
PRELIMINARY/FINAL	RB	JK
MUNICIPAL/STATE	RB	JK

PLAN CHECK

GRAPHIC 40 20 0 20 40 SCALE

FIELD BOOKS
DESIGN CRW Books 147, 148, & 151
STAKING
ASBUILT
CONTRACTOR
INSPECTOR

CONSTRUCTION RECORD

BM NO.	LOCATION	ELEV.
GAAB 66	See page D–24 of the MOA Benchmark Book	238.10
GAAB 96	See page D–26 of the MOA Benchmark Book	313.83

BASIS OF THIS DATUM GAAB 1972 ADJUST

VERTICAL DATUM

REV	DATE	DESCRIPTION	BY

REVISIONS

CRW ENGINEERING GROUP, LLC
3940 ARCTIC BLVD. SUITE 300
ANCHORAGE, ALASKA 99503
PHONE: (907) 562–3252
#AECL882–AK

CONSULTANT

STATE OF ALASKA 49TH REGISTERED PROFESSIONAL ENGINEER Justin T. Keene CE-11775

SEAL

MUNICIPALITY OF ANCHORAGE

PROJECT MANAGEMENT AND ENGINEERING DEPARTMENT

14–50 IMAGE DRIVE / REFLECTION DRIVE AREA ROAD RECONSTRUCTION – PHASE 2 ALL

DEMOLITION PLAN

STA 54+50 TO STA 56+50
AND RIDGELAKE CIRCLE

SCALE HOR. 1"=20' VER. N/A | GRID SW1638, SW1738 | DATE SEPT 2019 | STATUS 65% | SHEET B5 of B11

File: J:\JobsData\10133.00 Image Reflection Area Reconstruction\00 CADD\01 Working Set\01 Civil\Phase 2\10133.00 Demolition Plan – Phase 2.dwg

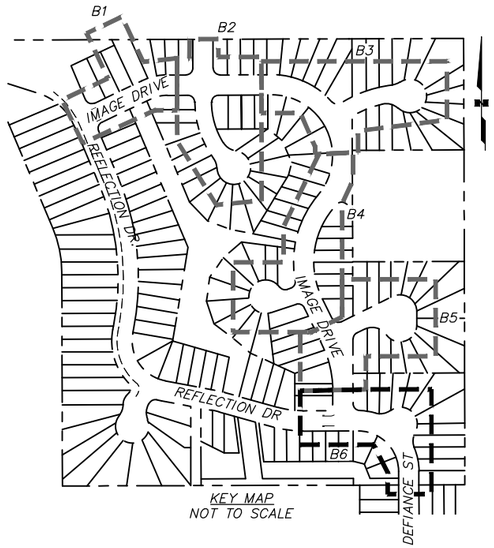

KEY MAP
NOT TO SCALE

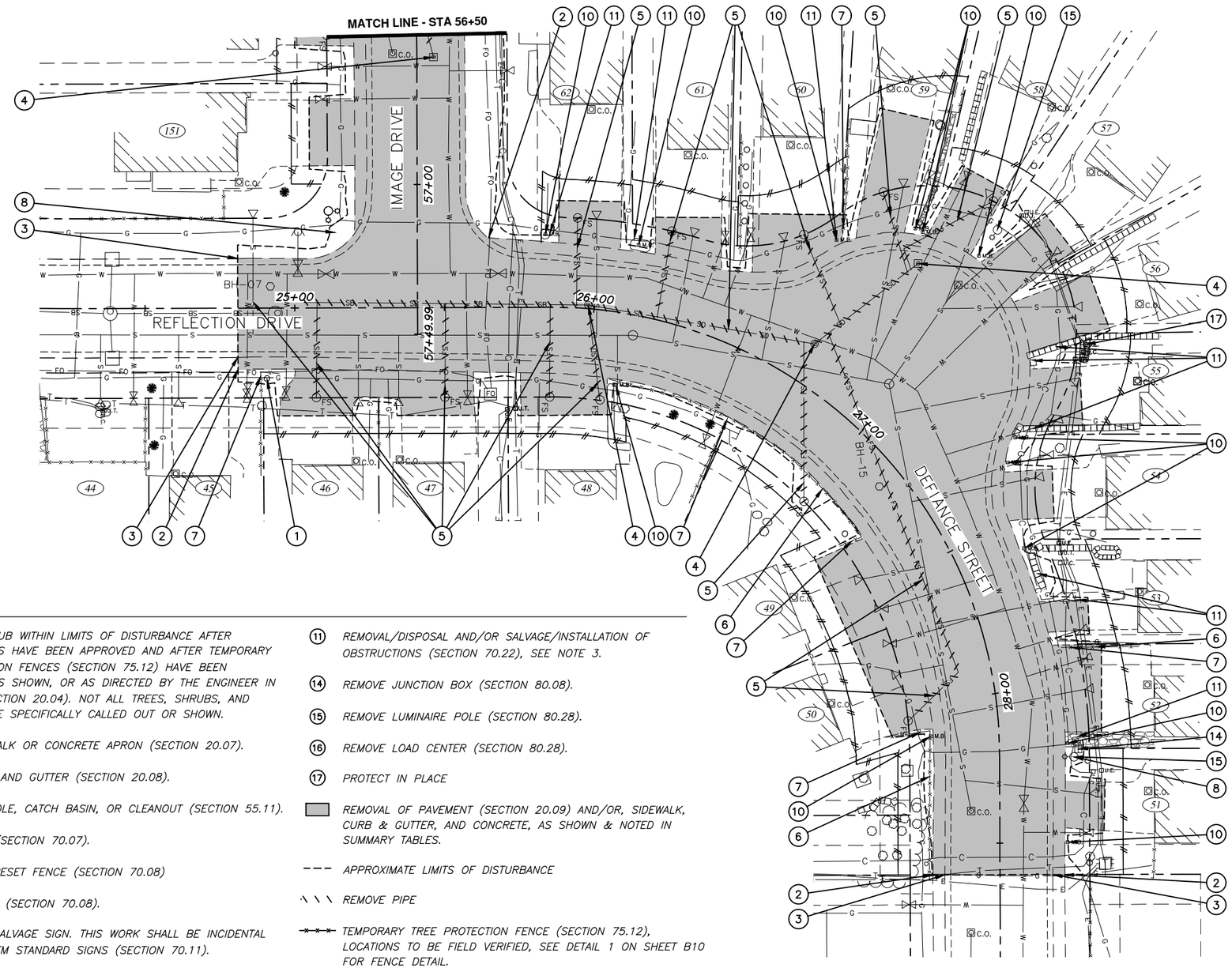

NOTES:

1. SEE SUMMARY TABLE SHEETS B7 – B10 FOR STATION AND OFFSET OF DEMOLITION ITEMS.
2. SEE ROADWAY IMPROVEMENTS (R) SHEETS FOR DRIVEWAY RECONSTRUCTION LIMITS.
3. EXISTING PRIVATE LANDSCAPING FEATURES SUCH AS RETAINING WALLS, TIMBERS, PLANTERS, LANDSCAPING ROCKS, ETC. ARE LOCATED IN THE ROW AND/OR ON PROPERTY WITHIN THE WORK ZONE. CONTRACTOR SHALL REMOVE ITEMS AS DESCRIBED IN THESE DEMOLITION PLANS OR AS DIRECTED BY THE ENGINEER IN THE FIELD. IN EACH CASE, THE CONTRACTOR AND THE ENGINEER SHALL COORDINATE WITH PROPERTY OWNER. IF PROPERTY OWNER WISHES TO SALVAGE ITEMS THAT ARE CURRENTLY IN ROW AND NOT ALLOWED TO BE REINSTALLED THERE, CONTRACTOR SHALL PLACE ITEMS ON OWNER'S PROPERTY. IF OWNER DOES NOT WANT ITEMS PLACED ON PROPERTY, CONTRACTOR SHALL DISPOSE OF REMOVED ITEMS AT A CONTRACTOR–SUPPLIED LOCATION. MATERIALS TO BE REINSTALLED ON PROPERTY OR ALLOWED TO BE REINSTALLED IN THE ROW SHALL BE CAREFULLY REMOVED, PROTECTED AND STORED BY THE CONTRACTOR UNTIL READY TO BE REINSTALLED.
   IT SHALL BE THE CONTRACTOR'S SOLE RESPONSIBILITY TO NOTIFY THE ENGINEER OF EXISTING DAMAGE TO ITEMS TO BE SALVAGED PRIOR TO REMOVAL. UNLESS OTHERWISE DIRECTED BY THE ENGINEER IN WRITING PRIOR TO REMOVAL, IF ANY SALVAGED ITEMS ARE DAMAGED, THE CONTRACTOR SHALL REPLACE THOSE ITEMS IN KIND INCLUDING MATCHING TYPE, COLOR, AND MANUFACTURER.

LEGEND

(1) CLEAR AND GRUB WITHIN LIMITS OF DISTURBANCE AFTER CLEARING LIMITS HAVE BEEN APPROVED AND AFTER TEMPORARY TREE PROTECTION FENCES (SECTION 75.12) HAVE BEEN ESTABLISHED AS SHOWN, OR AS DIRECTED BY THE ENGINEER IN THE FIELD (SECTION 20.04). NOT ALL TREES, SHRUBS, AND VEGETATION ARE SPECIFICALLY CALLED OUT OR SHOWN.

(2) REMOVE SIDEWALK OR CONCRETE APRON (SECTION 20.07).

(3) REMOVE CURB AND GUTTER (SECTION 20.08).

(4) REMOVE MANHOLE, CATCH BASIN, OR CLEANOUT (SECTION 55.11).

(5) REMOVE PIPE (SECTION 70.07).

(6) REMOVE AND RESET FENCE (SECTION 70.08)

(7) REMOVE FENCE (SECTION 70.08).

(8) REMOVE AND SALVAGE SIGN. THIS WORK SHALL BE INCIDENTAL TO THE BID ITEM STANDARD SIGNS (SECTION 70.11).

(10) RELOCATE MAILBOX OR CLUSTER MAILBOX UNIT (SECTION 70.17).

(11) REMOVAL/DISPOSAL AND/OR SALVAGE/INSTALLATION OF OBSTRUCTIONS (SECTION 70.22), SEE NOTE 3.

(14) REMOVE JUNCTION BOX (SECTION 80.08).

(15) REMOVE LUMINAIRE POLE (SECTION 80.28).

(16) REMOVE LOAD CENTER (SECTION 80.28).

(17) PROTECT IN PLACE

REMOVAL OF PAVEMENT (SECTION 20.09) AND/OR, SIDEWALK, CURB & GUTTER, AND CONCRETE, AS SHOWN & NOTED IN SUMMARY TABLES.

APPROXIMATE LIMITS OF DISTURBANCE

REMOVE PIPE

TEMPORARY TREE PROTECTION FENCE (SECTION 75.12), LOCATIONS TO BE FIELD VERIFIED, SEE DETAIL 1 ON SHEET B10 FOR FENCE DETAIL.

RECORD DRAWING

1. DATA PROVIDED BY: _____ TITLE: _____
   THIS WILL SERVE TO CERTIFY THAT THESE RECORD DRAWINGS ARE A TRUE AND ACCURATE REPRESENTATION OF THE PROJECT AS CONSTRUCTED.
   CONTRACTOR: _____
   BY: _____ TITLE: _____ DATE: _____
2. DATA TRANSFERRED BY: _____ TITLE: _____
   COMPANY: _____ DATE: _____
3. BASED ON PERIODIC FIELD OBSERVATIONS BY THE ENGINEER (OR AN INDIVIDUAL UNDER HIS/HER DIRECT SUPERVISION), THE CONTRACTOR–PROVIDED DATA APPEARS TO REPRESENT THE PROJECT AS CONSTRUCTED.
   DATA TRANSFER CHECKED BY: _____ TITLE: _____
   COMPANY: _____ DATE: _____
   BY: _____

DATA	DRAWN BY	CHECKED BY
BASE	TS	MJ
TOPOGRAPHY	TS	MJ
PROFILE	RB	JK
STORM SEWER	JH	JK
WATER/SANITARY SEWER	MV	JK
GAS	MV	JK
TELEPHONE	MV	JK
ELECTRIC	TK	BM
DESIGN	RB	JK
QUANTITIES	RB	JK
PRELIMINARY/FINAL	RB	JK
MUNICIPAL/STATE	RB	JK

PLAN CHECK

GRAPHIC 40 20 0 20 40 SCALE

FIELD BOOKS	BM NO.	LOCATION	ELEV.
DESIGN CRW Books 147, 148, & 151	GAAB 66	See page D–24 of the MOA Benchmark Book	238.10
	GAAB 96	See page D–26 of the MOA Benchmark Book	313.83
STAKING			
ASBUILT			
CONTRACTOR	BASIS OF THIS DATUM GAAB 1972 ADJUST		
INSPECTOR			

CONSTRUCTION RECORD

VERTICAL DATUM

REV	DATE	DESCRIPTION	BY

REVISIONS

CRW ENGINEERING GROUP, LLC
3940 ARCTIC BLVD. SUITE 300
ANCHORAGE, ALASKA 99503
PHONE: (907) 562–3252
#AECL882–AK

CONSULTANT

STATE OF ALASKA 49TH Justin T. Keene CE-11775 REGISTERED PROFESSIONAL ENGINEER

SEAL

MUNICIPALITY OF ANCHORAGE

PROJECT MANAGEMENT AND ENGINEERING DEPARTMENT

14–50 IMAGE DRIVE / REFLECTION DRIVE AREA ROAD RECONSTRUCTION – PHASE 2 ALL

DEMOLITION PLAN

REFLECTION DRIVE & DEFIANCE STREET

SCALE HOR. 1"=20' VER. N/A | GRID SW1638, SW1738 | DATE SEPT 2019 | STATUS 65% | SHEET B6 of B11

File: J:\JobsData\10133.00 Image Reflection Area Reconstruction\00 CADD\01 Working Set\01 Civil\Phase 2\10133.00 Demolition Plan – Phase 2.dwg

20.07

REMOVE SIDEWALK OR CONCRETE APRON ②

SHEET	APPX STATION BEGIN	APPX OFFSET (FT)	APPX STATION END	APPX OFFSET (FT)	AREA (SY)	REMARKS
B1	40+36.0	20.6 RT	43+00.0	20.8 RT	114	IMAGE DRIVE SIDEWALK
B1	41+87.1	21.6 LT	41+87.1	21.6 LT	4	IMAGE DRIVE MAILBOX PAD
B2	43+00.0	20.8 RT	43+54.0	20.5 RT	23	IMAGE DRIVE SIDEWALK
B2	43+99.9	20.6 RT	45+50.0	20.7 RT	65	IMAGE DRIVE SIDEWALK
B2	60+76.0	20.5 RT	61+75.8	20.4 RT	43	MIRAGE CIRCLE SIDEWALK
B2	62+47.0	18.6 LT	62+47.0	18.6 LT	5	MIRAGE CIRCLE MAILBOX PAD
B2	62+99.1	18.6 RT	62+99.1	18.6 RT	5	MIRAGE CIRCLE MAILBOX PAD
B3	45+50.0	20.7 RT	49+00.0	19.8 RT	143	IMAGE DRIVE SIDEWALK
B4	49+00.0	19.8 RT	53+16.9	22.4 RT	183	IMAGE DRIVE SIDEWALK
B4	51+56.8	20.6 RT	51+60.7	20.6 RT	8	PARCEL 170 SIDEWALK
B4	52+03.5	23.7 RT	52+03.5	23.7 RT	3	IMAGE DRIVE MAILBOX PAD
B4	53+06.6	24.4 RT	53+06.6	24.4 RT	3	IMAGE DRIVE MAILBOX PAD
B4	53+59.3	21.6 RT	54+50.0	21.0 RT	39	IMAGE DRIVE SIDEWALK
B4	54+39.9	19.3 LT	54+50.0	20.8 LT	5	IMAGE DRIVE SIDEWALK
B5	54+50.0	21.0 RT	56+50.0	21.0 RT	85	IMAGE DRIVE SIDEWALK
B5	54+50.0	20.8 LT	55+31.1	19.5 LT	278	RIDGELAKE CIRCLE SIDEWALK
B5	55+12.0	24.1 RT	55+12.0	24.1 RT	2	IMAGE DRIVE MAILBOX PAD
B5	55+20.7	24.2 RT	55+20.7	24.2 RT	2	IMAGE DRIVE MAILBOX PAD
B6	56+50.0	21.0 RT	57+15.1	20.9 RT	27	IMAGE DRIVE SIDEWALK
B6	24+81.0	20.3 RT	28+60.3	22.4 RT	154	DEFIANCE STREET SIDEWALK
B6	25+64.8	23.2 LT	28+60.6	21.5 LT	165	REFLECTION DRIVE/DEFIANCE STREET SIDEWALK

20.08

REMOVE CURB AND GUTTER ③

SHEET	APPX STATION BEGIN	APPX OFFSET (FT)	APPX STATION END	APPX OFFSET (FT)	LENGTH (FT)	REMARKS
B1	40+36.0	16.5 LT	43+00.0	16.3 LT	271	IMAGE DRIVE
B1	40+36.0	16.6 RT	43+00.0	16.7 RT	257	IMAGE DRIVE
B2	43+00.0	16.3 LT	60+75.1	16.6 RT	161	IMAGE DRIVE/MIRAGE CIRCLE
B2	43+00.0	16.7 RT	45+50.0	16.6 RT	854	IMAGE DRIVE/MIRAGE CIRCLE
B2	60+75.6	16.4 LT	45+50.0	16.4 LT	256	IMAGE DRIVE/MIRAGE CIRCLE
B3	45+50.0	16.6 LT	49+00.0	16.3 LT	932	IMAGE DRIVE/KEYANN CIRCLE
B3	45+50.0	16.6 RT	49+00.0	15.9 RT	325	IMAGE DRIVE
B4	49+00.0	16.3 LT	54+50.0	16.5 LT	543	IMAGE DRIVE
B4	49+00.0	15.9 RT	54+50.0	17.0 RT	878	IMAGE DRIVE/IMAGE CIRCLE
B5	54+50.0	16.5 LT	56+50.0	16.0 LT	753	IMAGE DRIVE/RIDGELAKE CIRCLE
B5	54+50.0	17.0 RT	56+50.0	17.1 RT	193	IMAGE DRIVE
B5	54+53.7	15.8 LT	55+16.7	15.9 LT	64	IMAGE DRIVE VALLEY GUTTER
B6	56+50.0	16.0 LT	58+60.6	17.5 LT	450	IMAGE DRIVE/DEFIANCE STREET
B6	56+50.0	17.1 RT	24+81.0	16.7 LT	109	IMAGE DRIVE/REFLECTION DRIVE
B6	24+81.0	16.2 RT	28+60.6	18.6 RT	351	REFLECTION DRIVE/DEFIANCE STREET

20.09

REMOVE PAVEMENT

SHEET	STATION TO STATION	OFFSET	AREA (SY)	REMARKS
B1	BOP TO 43+00	LT & RT	1,171	IMAGE DRIVE, DRIVEWAYS
B1	41+74 to 42+19	LT	144	SAPIN COURT
B2	43+00 TO 45+50	LT & RT	3,316	IMAGE DRIVE, MIRAGE CIRCLE, DRIVEWAYS
B3	45+50 TO 49+00	LT & RT	3,090	IMAGE DRIVE, KEYANN CIRCLE, DRIVEWAYS
B4	49+00 TO 54+50	LT & RT	3,675	IMAGE DRIVE, IMAGE CIRCLE, DRIVEWAYS
B5	54+50 TO 56+50	LT & RT	2,850	IMAGE DRIVE, RIDGELAKE CIRCLE, DRIVEWAYS
B6	56+50 TO EOP	LT & RT	2,796	IMAGE DRIVE, REFLECTION DRIVE, DEFIANCE STREET, DRIVEWAYS

NOTES: 1. SEE ROADWAY IMPROVEMENT SHEETS FOR ROADWAY PAVEMENT REMOVAL LIMITS.
2. SEE DRIVEWAY RECONSTRUCTION TABLE FOR DRIVEWAY PAVEMENT REMOVAL LIMITS.

55.11

REMOVE MANHOLE, CATCH BASIN, OR CLEANOUT ④

SHEET	APPX STATION	APPX OFFSET (FT)	CATCH BASIN	MANHOLE	CLEANOUT	REMARKS
B1	42+05.9	15.6 LT	X			
B1	42+08.0	15.8 RT	X			
B1	42+39.9	6.8 LT		X		
B2	43+80.2	1.8 LT		X		
B2	44+11.8	15.8 RT	X			
B2	44+14.1	15.7 LT	X			
B2	62+98.7	2.6 RT			X	
B3	46+07.2	3.6 LT		X		
B3	46+70.0	2.9 LT		X		
B3	46+71.6	15.9 RT	X			
B3	46+75.0	15.5 LT	X			
B3	48+08.4	14.9 LT		X		
B3	48+23.1	15.7 LT	X			
B4	49+46.1	6.6 LT		X		
B4	51+96.7	1.3 RT		X		
B4	52+01.4	15.3 LT	X			
B4	53+35.3	1.6 RT		X		
B4	80+34.1	2.8 RT		X		
B4	80+36.0	15.7 RT	X			
B4	80+36.8	15.4 LT	X			
B4	80+96.4	7.0 LT			X	
B5	90+02.0	0.5 RT		X		
B5	90+42.4	1.7 RT		X		
B5	90+46.2	15.9 RT	X			
B5	90+46.5	15.5 LT	X			
B5	92+18.5	19.0 LT		X		
B6	23+80.1	0.4 LT		X		
B6	25+97.9	1.3 LT		X		
B6	26+70.9	13.5 LT		X		
B6	26+71.5	55.3 LT			X	

RECORD DRAWING

1. DATA PROVIDED BY: _____ TITLE: _____
THIS WILL SERVE TO CERTIFY THAT THESE RECORD DRAWINGS ARE A TRUE AND ACCURATE REPRESENTATION OF THE PROJECT AS CONSTRUCTED.
CONTRACTOR: _____
BY: _____ TITLE: _____ DATE: _____
2. DATA TRANSFERRED BY: _____ TITLE: _____
COMPANY: _____ DATE: _____
3. BASED ON PERIODIC FIELD OBSERVATIONS BY THE ENGINEER (OR AN INDIVIDUAL UNDER HIS/HER DIRECT SUPERVISION), THE CONTRACTOR-PROVIDED DATA APPEARS TO REPRESENT THE PROJECT AS CONSTRUCTED.
DATA TRANSFER CHECKED BY: _____ TITLE: _____
COMPANY: _____ DATE: _____
BY: _____

DATA	DRAWN BY	CHECKED BY
BASE	TS	MJ
TOPOGRAPHY	TS	MJ
PROFILE	RB	JK
STORM SEWER	JH	JK
WATER/SANITARY SEWER	MV	JK
GAS	MV	JK
TELEPHONE	MV	JK
ELECTRIC	TK	BM
DESIGN	RB	JK
QUANTITIES	RB	JK
PRELIMINARY/FINAL	RB	JK
MUNICIPAL/STATE	RB	JK
PLAN CHECK		

FIELD BOOKS	BM NO.	LOCATION	ELEV.
DESIGN CRW Books 147, 148, & 151	GAAB 66	See page D-24 of the MOA Benchmark Book	238.10
	GAAB 96	See page D-26 of the MOA Benchmark Book	313.83
STAKING			
ASBUILT			
CONTRACTOR	BASIS OF THIS DATUM GAAB 1972 ADJUST		
INSPECTOR			
CONSTRUCTION RECORD	VERTICAL DATUM		

REV	DATE	DESCRIPTION	BY
REVISIONS			

CRW ENGINEERING GROUP, LLC
3940 ARCTIC BLVD. SUITE 300
ANCHORAGE, ALASKA 99503
PHONE: (907) 562-3252
#AECL882-AK
CONSULTANT

STATE OF ALASKA 49TH Justin T. Keene CE-11775 REGISTERED PROFESSIONAL ENGINEER
SEAL

MUNICIPALITY OF ANCHORAGE

PROJECT MANAGEMENT AND ENGINEERING DEPARTMENT

14-50 IMAGE DRIVE / REFLECTION DRIVE AREA ROAD RECONSTRUCTION - PHASE 2 ALL

DEMOLITION SUMMARY

SCALE HOR. N/A VER. N/A | GRID SW1638, SW1738 | DATE SEPT 2019 | STATUS 65% | SHEET B7 of B11

File: J:\JobsData\10133.00 Image Reflection Area Reconstruction\00 CADD\01 Working Set\01 Civil\Phase 2\10133.00 Demolition Plan - Phase 2.dwg

70.07

REMOVE PIPE ⑤

SHEET	APPX STA BEGIN	APPX OFFSET (FT)	APPX STA END	APPX OFFSET (FT)	SIZE (INCH)	LENGTH (FT)	REMARKS
B1	42+05.7	44.9 LT	42+39.9	6.8 LT	18	55	STORM DRAIN
B1	42+05.9	15.6 LT	42+39.9	6.8 LT	12	37	STORM DRAIN
B1	42+08.0	15.8 RT	42+39.9	6.8 LT	12	38	STORM DRAIN
B1	42+39.9	6.8 LT	43+80.2	1.8 LT	18	142	STORM DRAIN
B1	42+63.9	3.1 LT	42+65.4	30.0 LT	6	27	FOOTING DRAIN
B1	42+70.8	2.8 LT	42+71.2	30.0 LT	6	27	FOOTING DRAIN
B2	43+32.0	2.3 LT	43+32.3	30.6 LT	6	28	FOOTING DRAIN
B2	43+80.2	1.8 LT	44+11.8	15.8 RT	10	36	STORM DRAIN
B2	43+80.2	1.8 LT	44+14.1	15.7 LT	10	37	STORM DRAIN
B2	43+80.2	1.8 LT	46+07.2	3.6 LT	12	227	STORM DRAIN
B2	44+22.2	1.8 LT	44+22.3	30.6 LT	6	29	FOOTING DRAIN
B2	44+82.7	1.7 LT	44+82.8	30.0 LT	6	28	FOOTING DRAIN
B2	44+87.5	1.7 LT	44+87.5	30.0 RT	6	32	FOOTING DRAIN
B2	44+92.7	1.7 LT	44+92.8	30.0 LT	6	28	FOOTING DRAIN
B2	44+93.5	1.7 LT	44+93.5	30.0 RT	6	32	FOOTING DRAIN
B2	61+98.2	3.0 LT	62+98.7	2.6 RT	8	101	STORM DRAIN
B2	62+45.2	2.6 LT	62+45.0	25.6 RT	6	28	FOOTING DRAIN
B2	62+98.7	2.6 RT	64+87.6	24.7 RT	10	196	STORM DRAIN
B2	63+00.4	2.1 RT	63+01.5	25.0 RT	6	23	FOOTING DRAIN
B2	63+05.2	0.9 RT	63+10.6	25.0 RT	6	25	FOOTING DRAIN
B2	63+22.7	2.7 LT	63+18.4	25.0 LT	6	23	FOOTING DRAIN
B2	63+62.0	6.4 LT	63+62.5	25.0 RT	6	31	FOOTING DRAIN
B2	63+63.1	6.4 LT	63+62.8	25.0 LT	6	19	FOOTING DRAIN
B2	63+70.2	6.4 LT	63+69.8	25.0 RT	6	31	FOOTING DRAIN
B2	64+40.3	4.5 RT	64+33.1	31.4 RT	6	28	FOOTING DRAIN
B2	64+44.9	5.9 RT	64+67.3	49.9 LT	6	59	FOOTING DRAIN
B2	64+48.8	7.2 RT	64+40.0	37.4 RT	6	32	FOOTING DRAIN
B2	64+68.6	15.1 RT	64+99.1	43.0 LT	6	65	FOOTING DRAIN
B2	64+81.8	21.5 RT	65+12.4	31.7 LT	6	61	FOOTING DRAIN
B2	64+82.5	21.9 RT	65+21.0	10.9 LT	6	51	FOOTING DRAIN
B2	64+82.7	22.0 RT	64+71.3	50.0 RT	6	31	FOOTING DRAIN
B2	64+83.0	2214.0 RT	65+20.4	5.1 RT	6	43	FOOTING DRAIN
B2	64+84.1	22.7 RT	64+87.8	46.6 RT	6	26	FOOTING DRAIN
B2	64+84.1	22.7 RT	65+13.2	23.7 RT	6	33	FOOTING DRAIN
B2	64+85.2	23.4 RT	65+02.1	37.3 RT	6	26	FOOTING DRAIN
B3	45+63.2	1.6 LT	45+63.3	30.0 LT	6	28	FOOTING DRAIN
B3	45+64.5	1.6 LT	45+64.5	30.0 RT	6	32	FOOTING DRAIN
B3	45+70.2	1.6 LT	45+70.3	30.0 LT	6	28	FOOTING DRAIN
B3	45+72.5	1.6 LT	45+72.5	30.0 RT	6	32	FOOTING DRAIN
B3	46+07.2	3.6 LT	46+70.0	2.9 LT	18	64	STORM DRAIN
B3	46+26.6	1.4 LT	46+28.3	30.0 LT	6	29	FOOTING DRAIN
B3	46+32.5	1.0 LT	46+33.5	30.0 LT	6	29	FOOTING DRAIN
B3	46+70.0	2.9 LT	46+71.6	15.9 RT	10	19	STORM DRAIN

70.07

REMOVE PIPE ⑤

SHEET	APPX STA BEGIN	APPX OFFSET (FT)	APPX STA END	APPX OFFSET (FT)	SIZE (INCH)	LENGTH (FT)	REMARKS
B3	46+70.0	2.9 LT	46+75.0	15.5 LT	10	14	STORM DRAIN
B3	46+70.0	2.9 LT	48+08.4	14.9 LT	18	142	STORM DRAIN
B3	46+81.2	0.3 LT	46+86.4	30.0 LT	6	30	FOOTING DRAIN
B3	46+96.0	2.1 RT	46+99.5	30.0 LT	6	32	FOOTING DRAIN
B3	47+02.4	2.8 RT	46+99.4	30.0 RT	6	27	FOOTING DRAIN
B3	47+20.6	3.7 RT	47+20.3	30.0 RT	6	26	FOOTING DRAIN
B3	47+67.1	1.1 LT	47+61.5	30.9 LT	6	30	FOOTING DRAIN
B3	48+08.4	14.9 LT	48+23.1	15.7 LT	10	16	STORM DRAIN
B3	48+08.4	14.9 LT	49+46.1	6.6 LT	18	142	STORM DRAIN
B3	48+31.9	6.6 LT	48+19.9	30.0 RT	6	38	FOOTING DRAIN
B4	49+30.1	2.7 LT	49+37.7	30.0 RT	6	33	FOOTING DRAIN
B4	49+46.1	6.6 LT	51+96.7	1.3 RT	18	250	STORM DRAIN
B4	49+81.7	1.2 RT	49+77.4	30.0 RT	6	29	FOOTING DRAIN
B4	50+52.8	1.9 LT	50+59.8	30.0 RT	6	33	FOOTING DRAIN
B4	50+58.6	3.2 LT	50+65.2	30.0 RT	6	34	FOOTING DRAIN
B4	50+99.5	9.1 LT	50+97.9	30.0 LT	6	21	FOOTING DRAIN
B4	51+34.2	9.3 LT	51+32.2	30.0 RT	6	39	FOOTING DRAIN
B4	51+42.4	8.7 LT	51+39.4	30.0 RT	6	39	FOOTING DRAIN
B4	51+55.1	7.4 LT	51+58.5	30.0 LT	6	23	FOOTING DRAIN
B4	51+68.7	5.3 LT	51+73.7	30.0 LT	6	25	FOOTING DRAIN
B4	51+93.3	0.3 RT	51+92.5	30.0 RT	6	30	FOOTING DRAIN
B4	51+96.7	1.3 RT	52+01.4	15.3 LT	10	17	STORM DRAIN
B4	51+96.7	1.3 RT	53+35.3	1.6 RT	12	138	STORM DRAIN
B4	52+32.4	5.4 LT	52+29.1	30.0 LT	6	25	FOOTING DRAIN
B4	52+69.1	7.3 LT	52+69.5	30.0 LT	6	23	FOOTING DRAIN
B4	53+06.7	4.3 LT	53+11.1	30.0 LT	6	26	FOOTING DRAIN
B4	53+35.3	1.6 RT	54+87.2	2.0 LT	12	152	STORM DRAIN
B4	53+56.1	0.8 LT	53+53.6	30.0 LT	6	29	FOOTING DRAIN
B4	54+17.8	1.7 LT	54+17.7	30.0 LT	6	28	FOOTING DRAIN
B4	54+21.2	1.8 LT	54+21.4	30.0 RT	6	32	FOOTING DRAIN
B4	80+01.6	2.4 RT	80+34.1	2.8 RT	12	32	STORM DRAIN
B4	80+34.1	2.8 RT	80+36.0	15.7 RT	10	13	STORM DRAIN
B4	80+34.1	2.8 RT	80+36.8	15.4 LT	10	18	STORM DRAIN
B4	80+34.1	2.8 RT	80+96.4	7.0 LT	12	64	STORM DRAIN
B4	80+53.3	2.5 RT	80+55.1	24.5 RT	6	22	FOOTING DRAIN
B4	80+84.3	2.9 LT	80+77.7	30.1 LT	6	28	FOOTING DRAIN
B4	80+96.4	7.0 LT	81+61.8	4.5 LT	12	67	STORM DRAIN
B4	81+22.5	4.3 LT	81+22.8	49.4 LT	6	45	FOOTING DRAIN
B4	81+26.2	4.3 LT	81+26.4	49.9 RT	6	54	FOOTING DRAIN
B4	81+41.6	4.4 LT	81+41.4	48.7 LT	6	44	FOOTING DRAIN
B4	81+50.7	4.4 LT	81+50.9	45.4 RT	6	50	FOOTING DRAIN
B4	81+53.0	4.4 LT	81+67.2	33.3 RT	6	40	FOOTING DRAIN
B4	81+56.1	4.5 LT	81+56.3	42.5 LT	6	38	FOOTING DRAIN
B4	81+58.8	4.5 LT	81+73.7	24.1 LT	6	25	FOOTING DRAIN
B4	81+60.5	4.5 LT	81+78.0	13.8 RT	6	25	FOOTING DRAIN
B4	81+61.8	4.5 LT	81+79.8	3.4 LT	6	18	FOOTING DRAIN

RECORD DRAWING

1. DATA PROVIDED BY: _____ TITLE: _____
   THIS WILL SERVE TO CERTIFY THAT THESE RECORD DRAWINGS ARE A TRUE AND ACCURATE REPRESENTATION OF THE PROJECT AS CONSTRUCTED.
   CONTRACTOR: _____
   BY: _____ TITLE: _____ DATE: _____
2. DATA TRANSFERRED BY: _____ TITLE: _____
   COMPANY: _____ DATE: _____
3. BASED ON PERIODIC FIELD OBSERVATIONS BY THE ENGINEER (OR AN INDIVIDUAL UNDER HIS/HER DIRECT SUPERVISION), THE CONTRACTOR-PROVIDED DATA APPEARS TO REPRESENT THE PROJECT AS CONSTRUCTED.
   DATA TRANSFER CHECKED BY: _____ TITLE: _____
   COMPANY: _____ DATE: _____
   BY: _____

DATA	DRAWN BY	CHECKED BY
BASE	TS	MJ
TOPOGRAPHY	TS	MJ
PROFILE	RB	JK
STORM SEWER	JH	JK
WATER/SANITARY SEWER	MV	JK
GAS	MV	JK
TELEPHONE	MV	JK
ELECTRIC	TK	BM
DESIGN	RB	JK
QUANTITIES	RB	JK
PRELIMINARY/FINAL	RB	JK
MUNICIPAL/STATE	RB	JK

PLAN CHECK

FIELD BOOKS	BM NO.	LOCATION	ELEV.
DESIGN CRW Books 147, 148, & 151	GAAB 66	See page D-24 of the MOA Benchmark Book	238.10
	GAAB 96	See page D-26 of the MOA Benchmark Book	313.83
STAKING			
ASBUILT			
CONTRACTOR	BASIS OF THIS DATUM GAAB 1972 ADJUST		
INSPECTOR			

CONSTRUCTION RECORD — VERTICAL DATUM

REV	DATE	DESCRIPTION	BY

REVISIONS

CRW ENGINEERING GROUP, LLC
3940 ARCTIC BLVD. SUITE 300
ANCHORAGE, ALASKA 99503
PHONE: (907) 562-3252
#AECL882-AK

CONSULTANT

STATE OF ALASKA 49TH Justin T. Keene CE-11775 REGISTERED PROFESSIONAL ENGINEER

SEAL

MUNICIPALITY OF ANCHORAGE

PROJECT MANAGEMENT AND ENGINEERING DEPARTMENT

14-50 IMAGE DRIVE / REFLECTION DRIVE AREA ROAD RECONSTRUCTION – PHASE 2 ALL

DEMOLITION SUMMARY

SCALE HOR. N/A VER. N/A | GRID SW1638, SW1738 | DATE SEPT 2019 | STATUS 65% | SHEET B8 of B11

File: J:\JobsData\10133.00 Image Reflection Area Reconstruction\00 CADD\01 Working Set\01 Civil\Phase 2\10133.00 Demolition Plan – Phase 2.dwg

70.07

REMOVE PIPE ⑤

SHEET	APPX STA BEGIN	APPX OFFSET (FT)	APPX STA END	APPX OFFSET (FT)	SIZE (INCH)	LENGTH (FT)	REMARKS
B5	54+58.1	1.9 LT	54+58.2	30.0 RT	6	32	FOOTING DRAIN
B5	54+87.2	2.0 LT	56+57.4	5.6 LT	12	171	STORM DRAIN
B5	55+06.9	1.6 RT	56+96.0	30.0 RT	6	30	FOOTING DRAIN
B5	55+38.2	5.1 RT	55+36.2	30.0 RT	6	25	FOOTING DRAIN
B5	56+03.1	4.1 RT	56+06.0	30.0 RT	6	26	FOOTING DRAIN
B5	56+42.2	2.0 LT	56+49.5	30.0 RT	6	33	FOOTING DRAIN
B5	90+02.0	0.5 RT	90+42.4	1.7 RT	12	40	STORM DRAIN
B5	90+42.4	1.7 RT	90+46.2	15.9 RT	10	15	STORM DRAIN
B5	90+42.4	1.7 RT	90+46.5	15.5 LT	10	18	STORM DRAIN
B5	90+42.4	1.7 RT	92+18.5	19.0 LT	12	195	STORM DRAIN
B5	90+88.5	1.3 RT	90+88.7	25.0 RT	6	24	FOOTING DRAIN
B5	91+16.3	1.0 RT	91+16.0	25.0 LT	6	26	FOOTING DRAIN
B5	91+25.0	0.9 RT	91+25.3	30.8 RT	6	30	FOOTING DRAIN
B5	91+48.9	0.7 RT	93+05.2	46.5 RT	6	59	FOOTING DRAIN
B5	91+55.6	0.7 RT	91+55.3	25.0 LT	6	26	FOOTING DRAIN
B5	91+66.7	0.5 RT	93+31.7	13.3 RT	6	98	FOOTING DRAIN
B5	91+93.5	0.3 RT	93+30.8	16.2 LT	6	110	FOOTING DRAIN
B5	91+96.1	0.3 RT	91+95.8	25.0 LT	6	25	FOOTING DRAIN
B5	91+99.5	0.2 RT	93+16.9	37.2 LT	6	109	FOOTING DRAIN
B5	92+14.2	0.1 RT	92+96.5	48.3 LT	6	97	FOOTING DRAIN
B5	92+18.5	3.5 LT	92+75.5	50.0 LT	6	81	FOOTING DRAIN
B5	92+18.5	8.0 LT	92+53.1	50.0 LT	6	65	FOOTING DRAIN
B5	92+18.5	10.2 LT	92+18.5	26.2 LT	6	24	FOOTING DRAIN
B5	92+18.5	10.7 LT	92+43.5	50.0 LT	6	50	FOOTING DRAIN
B5	92+18.5	11.8 LT	92+18.5	37.2 LT	6	26	FOOTING DRAIN
B5	92+18.5	12.6 LT	92+29.4	48.0 LT	6	37	FOOTING DRAIN
B6	23+80.1	0.4 LT	25+97.9	1.3 LT	12	218	STORM DRAIN
B6	24+21.7	2.9 LT	24+22.0	30.0 LT	6	27	FOOTING DRAIN
B6	24+48.8	2.6 LT	24+48.8	30.0 RT	6	33	FOOTING DRAIN
B6	24+65.2	2.4 LT	24+65.1	30.0 RT	6	32	FOOTING DRAIN
B6	25+07.5	1.8 LT	25+07.1	30.0 RT	6	32	FOOTING DRAIN
B6	25+50.4	1.3 LT	25+50.1	30.0 RT	6	31	FOOTING DRAIN
B6	25+85.4	0.9 LT	25+85.0	30.0 RT	6	31	FOOTING DRAIN
B6	25+94.1	1.0 LT	25+92.9	30.0 LT	6	29	FOOTING DRAIN
B6	25+97.9	1.3 LT	26+06.0	29.9 RT	6	32	FOOTING DRAIN
B6	25+97.9	1.3 LT	26+70.9	13.5 LT	12	77	STORM DRAIN
B6	26+21.1	1.0 LT	26+19.5	30.0 LT	6	29	FOOTING DRAIN
B6	26+67.8	12.2 LT	27+02.8	30.0 RT	6	53	FOOTING DRAIN
B6	26+70.9	13.5 LT	26+81.5	55.3 LT	12	44	STORM DRAIN
B6	26+72.6	19.1 LT	28+06.3	30.0 RT	6	145	FOOTING DRAIN
B6	26+74.0	23.9 LT	26+53.2	43.6 LT	6	32	FOOTING DRAIN
B6	26+80.6	50.9 LT	26+65.4	68.8 LT	6	28	FOOTING DRAIN
B6	26+80.9	52.4 LT	26+86.4	87.2 LT	6	41	FOOTING DRAIN

70.08

REMOVE AND RESET FENCE ⑥

SHEET	EXISTING LOCATION				PROPOSED LOCATION					REMARKS
	APPX BEGIN STATION	APPX BEGIN OFFSET (FT)	APPX END STATION	APPX END OFFSET (FT)	APPX BEGIN STATION	APPX BEGIN OFFSET (FT)	APPX END STATION	APPX END OFFSET (FT)	LENGTH (FT)	
B1	40+76.5	16.7 LT	40+88.5	16.6 LT	40+74.5	30.0 LT	40+88.2	30.0 LT	12.0	
B1	40+88.6	20.6 LT	41+01.8	20.6 LT	40+88.2	30.0 LT	41+02.9	30.0 LT	13.0	
B1	41+01.4	24.1 RT	41+41.3	24.3 RT	41+01.3	30.0 RT	41+41.0	30.0 RT	39.8	
B1	41+50.3	30.3 RT	41+89.6	27.9 RT	41+50.3	30.0 RT	41+89.5	30.0 RT	39.2	
B1	41+95.9	27.9 RT	43+16.5	27.4 RT	41+95.7	30.0 RT	43+16.5	30.0 RT	107.8	
B4	52+16.0	28.4 RT	52+79.0	28.3 RT	52+16.0	30.0 RT	52+78.9	30.0 RT	69.8	
B6	26+08.7	22.6 RT	27+29.0	22.9 RT	26+10.6	30.0 RT	27+27.0	30.0 RT	93.1	
B6	28+11.0	23.0 RT	28+62.3	23.6 RT	28+11.7	30.0 RT	28+60.6	30.0 RT	47.1	

70.08

REMOVE FENCE ⑦

SHEET	APPX BEGIN STATION	APPX BEGIN OFFSET (FT)	APPX END STATION	APPX END OFFSET (FT)	LENGTH (FT)	REMARKS
B1	40+88.6	20.6 LT	40+88.2	30.0 LT	9.4	WOOD
B1	41+01.4	24.1 RT	41+01.3	30.0 RT	5.9	WOOD
B1	41+41.3	24.3 RT	41+41.0	30.0 RT	5.8	WOOD
B1	41+95.9	27.9 RT	41+95.7	30.0 RT	2.1	WOOD
B3	45+65.1	22.2 LT	45+65.2	30.0 LT	7.8	WOOD
B4	52+79.0	28.3 RT	52+78.9	30.0 RT	1.7	WOOD
B6	26+38.6	29.2 LT	26+38.8	31.9 RT	2.8	WOOD
B6	26+57.8	22.0 RT	26+58.3	30.0 RT	8.0	WOOD
B6	27+29.0	22.9 RT	27+27.0	30.0 RT	7.3	WOOD
B6	28+11.0	23.0 RT	28+11.7	30.0 RT	7.1	WOOD

RECORD DRAWING

1. DATA PROVIDED BY: _____ TITLE: _____
   THIS WILL SERVE TO CERTIFY THAT THESE RECORD DRAWINGS ARE A TRUE AND ACCURATE REPRESENTATION OF THE PROJECT AS CONSTRUCTED.
   CONTRACTOR: _____
   BY: _____ TITLE: _____ DATE: _____
2. DATA TRANSFERRED BY: _____ TITLE: _____
   COMPANY: _____ DATE: _____
3. BASED ON PERIODIC FIELD OBSERVATIONS BY THE ENGINEER (OR AN INDIVIDUAL UNDER HIS/HER DIRECT SUPERVISION), THE CONTRACTOR-PROVIDED DATA APPEARS TO REPRESENT THE PROJECT AS CONSTRUCTED.
   DATA TRANSFER CHECKED BY: _____ TITLE: _____
   COMPANY: _____ DATE: _____
   BY: _____

DATA	DRAWN BY	CHECKED BY
BASE	TS	MJ
TOPOGRAPHY	TS	MJ
PROFILE	RB	JK
STORM SEWER	JH	JK
WATER/SANITARY SEWER	MV	JK
GAS	MV	JK
TELEPHONE	MV	JK
ELECTRIC	TK	BM
DESIGN	RB	JK
QUANTITIES	RB	JK
PRELIMINARY/FINAL	RB	JK
MUNICIPAL/STATE	RB	JK

PLAN CHECK

FIELD BOOKS
DESIGN CRW Books 147, 148, & 151
STAKING
ASBUILT
CONTRACTOR
INSPECTOR

CONSTRUCTION RECORD

BM NO.	LOCATION	ELEV.
GAAB 66	See page D-24 of the MOA Benchmark Book	238.10
GAAB 96	See page D-26 of the MOA Benchmark Book	313.83

BASIS OF THIS DATUM GAAB 1972 ADJUST

VERTICAL DATUM

REV	DATE	DESCRIPTION	BY

REVISIONS

CRW ENGINEERING GROUP, LLC
3940 ARCTIC BLVD. SUITE 300
ANCHORAGE, ALASKA 99503
PHONE: (907) 562-3252
#AECL882-AK

CONSULTANT

STATE OF ALASKA 49TH REGISTERED PROFESSIONAL ENGINEER Justin T. Keene CE-11775

SEAL

MUNICIPALITY OF ANCHORAGE

PROJECT MANAGEMENT AND ENGINEERING DEPARTMENT

14-50 IMAGE DRIVE / REFLECTION DRIVE AREA ROAD RECONSTRUCTION – PHASE 2 ALL

DEMOLITION SUMMARY

SCALE HOR. N/A VER. N/A | GRID SW1638, SW1738 | DATE SEPT 2019 | STATUS 65% | SHEET B9 of B11

File: J:\JobsData\10133.00 Image Reflection Area Reconstruction\00 CADD\01 Working Set\01 Civil\Phase 2\10133.00 Demolition Plan – Phase 2.dwg

70.11

STANDARD SIGN ⑧

SHEET	APPX STATION	APPX OFFSET (FT)	SIGN TYPE	LEGEND	SIGN POST	REMARKS
B2	43+53	29.0 LT	R1-1	STOP	PERFORATED STEEL TUBE	
B2	44+01	23.2 RT	D3-1D	IMAGE DR	PERFORATED STEEL TUBE	
			D3-1D	MIRAGE CIR		
			R1-1	STOP		
B2	44+89	21.4 LT	W17-1	SPEED HUMP	STEEL LIGHT POLE	
B2	44+91	21.3 RT	W17-1	SPEED HUMP	PERFORATED STEEL TUBE	
B3	47+71	26.5 LT	D3-1D	IMAGE DR	STEEL LIGHT POLE	
			D3-1D	KEYANN CIR		
			R1-1	STOP		
B4	53+57	28.8 RT	D3-1D	IMAGE DR	STEEL LIGHT POLE	
			D3-1D	IMAGE CIR		
			R1-1	STOP		
B4	54+07	22.5 LT	W17-1	SPEED HUMP	PERFORATED STEEL TUBE	
B4	54+01	13.3 RT	W17-1	SPEED HUMP	PERFORATED STEEL TUBE	
B5	54+56	27.8 LT	D3-1D	IMAGE DR	PERFORATED STEEL TUBE	
			D3-1D	RIDGELAKE CIR		
			R1-1	STOP		
B6	57+16	27.4 RT	D3-1D	REFLECTION DR	STEEL LIGHT POLE	
			D3-1D	DEFIANCE ST		
			D3-1D	REFLECTION DR		
			D3-1D	DEFIANCE ST		
			R1-1	STOP		
B6	28+21	24.8 LT	R2-1	SPEED LIMIT 25	STEEL LIGHT POLE	DEFIANCE STREET

70.17

RELOCATE CLUSTER MAILBOX UNIT ⑩

EXISTING LOCATION			NEW LOCATION		
SHEET	APPX STATION	APPX OFFSET (FT)	APPX STATION	APPX OFFSET (FT)	REMARKS
B1	41+87.1	21.7 LT	41+87.1	23.5 LT	IMAGE DRIVE
B2	62+47.0	18.6 LT	62+47.0	18.5 LT	IMAGE CIRCLE
B2	62+99.1	18.6 RT	63+00.1	18.5 RT	IMAGE CIRCLE
B4	52+03.5	23.7 RT	52+03.5	23.8 RT	IMAGE DRIVE
B4	53+06.6	24.4 RT	53+00.8	23.5 RT	IMAGE DRIVE
B5	55+11.9	24.2 RT	55+17.2	23.6 RT	IMAGE DRIVE
B5	55+20.7	24.2 RT	55+17.2	23.6 RT	IMAGE DRIVE

70.17

RELOCATE MAILBOX ⑩

EXISTING LOCATION			NEW LOCATION		
SHEET	APPX STATION	APPX OFFSET (FT)	APPX STATION	APPX OFFSET (FT)	REMARKS
B3	70+59.3	16.6 RT	70+59.3	17.5 RT	
B3	71+21.3	16.1 LT	71+21.3	17.5 LT	PROVIDE 2 MAILBOXES ON ONE POST
B3	71+45.6	16.0 RT	71+45.6	17.5 RT	
B3	71+55.0	16.2 RT	71+55.1	17.3 RT	
B3	71+56.9	15.5 RT	71+57.0	17.2 RT	
B3	71+66.7	15.8 LT	71+66.6	18.4 LT	
B3	72+21.9	33.8 LT	72+21.0	35.0 LT	
B3	72+27.9	37.2 RT	72+27.1	38.8 RT	
B3	72+34.2	40.0 LT	72+33.7	41.5 LT	
B3	72+47.5	42.3 RT	72+47.6	43.5 RT	
B3	72+81.7	24.0 LT	72+82.6	24.6 LT	
B3	72+83.2	22.2 LT	72+84.0	22.6 LT	
B3	72+87.4	12.4 RT	72+88.4	12.7 RT	
B3	72+88.3	10.4 RT	72+89.0	10.6 RT	
B6	25+83.8	24.4 LT	25+83.8	24.0 LT	
B6	26+11.0	23.3 LT	26+11.0	24.0 LT	
B6	26+11.5	24.1 RT	26+11.5	24.0 LT	
B6	26+61.3	47.2 LT	26+60.4	48.0 LT	
B6	26+76.2	64.3 LT	26+75.6	65.9 LT	
B6	26+78.1	64.7 LT	26+77.3	67.1 LT	
B6	26+91.6	70.0 LT	26+91.5	72.5 LT	
B6	27+30.9	38.2 LT	27+33.2	40.2 LT	
B6	27+35.4	31.5 LT	27+37.4	34.0 LT	
B6	27+59.0	22.7 LT	27+59.0	24.0 LT	
B6	28+13.1	22.8 RT	28+13.1	24.0 RT	
B6	28+17.2	22.7 LT	28+17.2	24.0 LT	
B6	28+49.8	22.7 LT	28+49.8	24.0 LT	

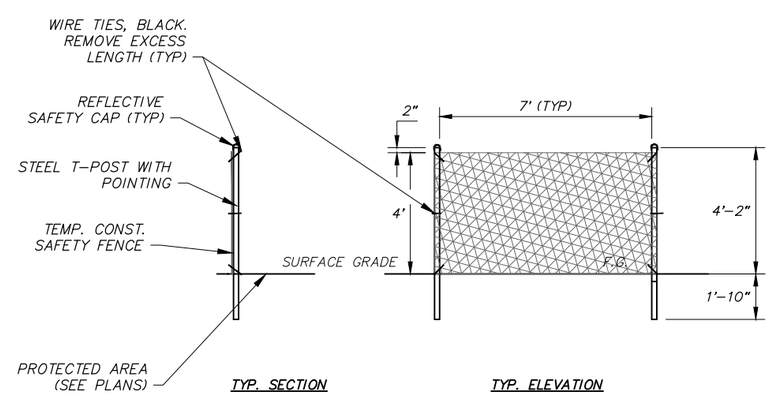

1 **TEMPORARY TREE PROTECTION FENCE DETAIL**

SCALE: NTS

RECORD DRAWING

1. DATA PROVIDED BY: _____ TITLE: _____
   THIS WILL SERVE TO CERTIFY THAT THESE RECORD DRAWINGS ARE A TRUE AND ACCURATE REPRESENTATION OF THE PROJECT AS CONSTRUCTED.
   CONTRACTOR: _____
   BY: _____ TITLE: _____ DATE: _____
2. DATA TRANSFERRED BY: _____ TITLE: _____
   COMPANY: _____ DATE: _____
3. BASED ON PERIODIC FIELD OBSERVATIONS BY THE ENGINEER (OR AN INDIVIDUAL UNDER HIS/HER DIRECT SUPERVISION), THE CONTRACTOR-PROVIDED DATA APPEARS TO REPRESENT THE PROJECT AS CONSTRUCTED.
   DATA TRANSFER CHECKED BY: _____ TITLE: _____
   COMPANY: _____ DATE: _____
   BY: _____

DATA	DRAWN BY	CHECKED BY
BASE	TS	MJ
TOPOGRAPHY	TS	MJ
PROFILE	RB	JK
STORM SEWER	JH	JK
WATER/SANITARY SEWER	MV	JK
GAS	MV	JK
TELEPHONE	MV	JK
ELECTRIC	TK	BM
DESIGN	RB	JK
QUANTITIES	RB	JK
PRELIMINARY/FINAL	RB	JK
MUNICIPAL/STATE	RB	JK

PLAN CHECK

FIELD BOOKS	BM NO.	LOCATION	ELEV.
DESIGN CRW Books 147, 148, & 151	GAAB 66	See page D-24 of the MOA Benchmark Book	238.10
	GAAB 96	See page D-26 of the MOA Benchmark Book	313.83
STAKING			
ASBUILT			
CONTRACTOR	BASIS OF THIS DATUM GAAB 1972 ADJUST		
INSPECTOR			

CONSTRUCTION RECORD — VERTICAL DATUM

REV	DATE	DESCRIPTION	BY

REVISIONS

CRW ENGINEERING GROUP, LLC
3940 ARCTIC BLVD. SUITE 300
ANCHORAGE, ALASKA 99503
PHONE: (907) 562-3252
#ECL882-AK

CONSULTANT

STATE OF ALASKA 49TH Justin T. Keene CE-11775 REGISTERED PROFESSIONAL ENGINEER

SEAL

MUNICIPALITY OF ANCHORAGE

PROJECT MANAGEMENT AND ENGINEERING DEPARTMENT

14-50 IMAGE DRIVE / REFLECTION DRIVE AREA ROAD RECONSTRUCTION – PHASE 2 ALL

DEMOLITION SUMMARY

SCALE HOR. N/A VER. N/A | GRID SW1638, SW1738 | DATE SEPT 2019 | STATUS 65% | SHEET B10 of B11

File: J:\JobsData\10133.00 Image Reflection Area Reconstruction\00 CADD\01 Working Set\01 Civil\Phase 2\10133.00 Demolition Plan - Phase 2.dwg

70.22

REMOVAL/DISPOSAL AND/OR SALVAGE/INSTALLATION OF OBSTRUCTIONS (11)

SHEET	APPX STATION	APPX OFFSET (FT)	TYPE OF OBSTRUCTION	REMARKS
B1	40+92	19.7 LT	PLANTERS	
B1	40+98	19.7 LT	PLANTERS	
B1	41+33	25.7 LT	LANDSCAPING ROCKS	
B2	63+11	32.7 RT	LANDSCAPING ROCKS	
B2	63+81	22.7 RT	LANDSCAPING ROCKS	
B2	63+57	27.5 RT	LANDSCAPING ROCKS	
B2	65+19	1.5 LT	LANDSCAPING ROCKS	
B3	46+00	27.7 RT	PLANTERS	
B3	46+24	28.7 RT	PLANTERS	
B3	48+74	24.1 LT	KEYSTONE RETAINING WALL	
B3	71+39	19.9 LT	LANDSCAPING ROCKS	
B3	71+71	19.7 LT	ROCK POST/PLANTERS	
B4	51+05	29.2 RT	LANDSCAPING ROCKS	
B4	51+01	28.8 LT	LANDSCAPING ROCKS	
B4	51+25	27.5 RT	LANDSCAPING ROCKS	
B4	51+39	30.0 RT	LANDSCAPING ROCKS	
B4	51+71	29.6 RT	PLANTERS	
B4	81+15	46.0 LT	PLANTERS	
B4	81+40	52.5 RT	LANDSCAPING ROCKS	
B4	81+60	43.9 RT	PLANTERS	
B4	81+67	23.2 RT	SPRINKLER HEAD	
B5	90+87	26.8 LT	LANDSCAPING ROCKS/PLANTERS	
B5	91+27	22.6 LT	LANDSCAPING ROCKS	
B5	92+89	49.8 LT	KEYSTONE RETAINING WALL	
B5	93+07	40.7 LT	KEYSTONE RETAINING WALL	
B5	93+23	27.4 LT	LANDSCAPING ROCKS	
B5	93+27	19.1 RT	LANDSCAPING ROCKS	
B5	93+31	8.0 LT	LANDSCAPING ROCKS	
B5	93+31	1.7 LT	LANDSCAPING ROCKS	
B5	56+00	25.2 RT	LANDSCAPING ROCKS	
B6	25+84	24.4 LT	PLANTERS	
B6	26+11	23.2 LT	PLANTERS	
B6	26+61	47.2 LT	PLANTERS	
B6	27+07	84.7 LT	TIMBER RETAINING WALL	
B6	27+17	60.9 LT	TIMBER RETAINING WALL	
B6	27+29	41.0 LT	TIMBER RETAINING WALL	
B6	27+62	24.1 LT	KEYSTONE RETAINING WALL	
B6	27+77	29.1 LT	CONCRETE BLOCKS	
B6	28+16	28.1 LT	LANDSCAPING ROCKS	

75.11

SALVAGE AND RELOCATE OR DISPOSE EXISTING BOULDER (13)

SHEET	APPX STATION	APPX OFFSET (FT)	NUMBER	NOTES
B2	43+51	28.2 RT	1	
B2	43+52	25.4 RT	1	
B2	43+52	30.3 RT	1	
B3	46+39	28.1 RT	1	
B4	53+64	27.5 RT	1	
B4	53+66	26.8 RT	1	
B5	55+16	33.3 LT	1	
B5	55+28	25.1 LT	1	
B5	55+40	23.1 LT	1	
B5	55+59	20.6 LT	1	

80.08

REMOVE JUNCTION BOX (14)

SHEET	APPX STATION	APPX OFFSET (FT)	REMARKS
B1	41+78.9	18.8 LT	
B2	43+48.8	21.1 LT	
B2	63+06.8	16.9 RT	MIRAGE CIRCLE
B2	44+88.6	18.5 LT	
B3	46+29.0	18.1 LT	
B3	47+72.2	23.0 LT	
B4	49+00.4	22.2 RT	
B4	50+62.0	23.0 RT	
B5	55+17.7	19.3 LT	
B6	28+19.0	26.3 LT	REFLECTION DRIVE

80.28

REMOVE LUMINARE POLE (15)

SHEET	APPX STATION	APPX OFFSET (FT)	REMARKS
B1	41+79.3	21.6 LT	
B2	43+48.3	24.2 LT	
B2	63+06.0	19.3 RT	MIRAGE CIRCLE
B2	64+37.8	29.7 RT	MIRAGE CIRCLE
B2	44+88.7	21.5 LT	
B3	46+28.6	21.8 LT	
B3	47+70.7	26.5 LT	
B3	48+99.8	24.4 RT	
B3	72+30.4	41.2 LT	KEYANN CIRCLE
B4	50+62.2	26.8 RT	
B4	51+96.9	27.3 RT	
B4	53+62.1	30.2 RT	
B4	81+32.3	22.0 LT	IMAGE CIRCLE
B5	91+41.1	43.4 RT	RIDGELAKE CIRCLE
B5	55+16.1	26.4 RT	
B6	26+91.0	80.6 LT	REFLECTION DRIVE
B6	28+21.3	24.7 LT	REFLECTION DRIVE

80.28

REMOVE LOAD CENTER (16)

SHEET	APPX STATION	APPX OFFSET (FT)	REMARKS
B1	42+14.5	35.5 LT	

RECORD DRAWING

1. DATA PROVIDED BY: _____ TITLE: _____
   THIS WILL SERVE TO CERTIFY THAT THESE RECORD DRAWINGS ARE A TRUE AND ACCURATE REPRESENTATION OF THE PROJECT AS CONSTRUCTED.
   CONTRACTOR: _____
   BY: _____ TITLE: _____ DATE: _____
2. DATA TRANSFERRED BY: _____ TITLE: _____
   COMPANY: _____ DATE: _____
3. BASED ON PERIODIC FIELD OBSERVATIONS BY THE ENGINEER (OR AN INDIVIDUAL UNDER HIS/HER DIRECT SUPERVISION), THE CONTRACTOR-PROVIDED DATA APPEARS TO REPRESENT THE PROJECT AS CONSTRUCTED.
   DATA TRANSFER CHECKED BY: _____ TITLE: _____
   COMPANY: _____ DATE: _____
   BY: _____

DATA	DRAWN BY	CHECKED BY
BASE	TS	MJ
TOPOGRAPHY	TS	MJ
PROFILE	RB	JK
STORM SEWER	JH	JK
WATER/SANITARY SEWER	MV	JK
GAS	MV	JK
TELEPHONE	MV	JK
ELECTRIC	TK	BM
DESIGN	RB	JK
QUANTITIES	RB	JK
PRELIMINARY/FINAL	RB	JK
MUNICIPAL/STATE	RB	JK

PLAN CHECK

FIELD BOOKS	BM NO.	LOCATION	ELEV.
DESIGN CRW Books 147, 148, & 151	GAAB 66	See page D-24 of the MOA Benchmark Book	238.10
	GAAB 96	See page D-26 of the MOA Benchmark Book	313.83
STAKING			
ASBUILT			
CONTRACTOR	BASIS OF THIS DATUM GAAB 1972 ADJUST		
INSPECTOR			

CONSTRUCTION RECORD — VERTICAL DATUM

REV	DATE	DESCRIPTION	BY

REVISIONS

CRW ENGINEERING GROUP, LLC
3940 ARCTIC BLVD. SUITE 300
ANCHORAGE, ALASKA 99503
PHONE: (907) 562-3252
#AECL882-AK

CONSULTANT

STATE OF ALASKA 49TH Justin T. Keene CE-11775 REGISTERED PROFESSIONAL ENGINEER

SEAL

MUNICIPALITY OF ANCHORAGE

PROJECT MANAGEMENT AND ENGINEERING DEPARTMENT

14-50 IMAGE DRIVE / REFLECTION DRIVE AREA ROAD RECONSTRUCTION – PHASE 2 ALL

DEMOLITION SUMMARY

SCALE HOR. N/A VER. N/A | GRID SW1638, SW1738 | DATE SEPT 2019 | STATUS 65% | SHEET B11 of B11

File: J:\JobsData\10133.00 Image Reflection Area Reconstruction\00 CADD\01 Working Set\01 Civil\Phase 2\10133.00 Demolition Plan – Phase 2.dwg

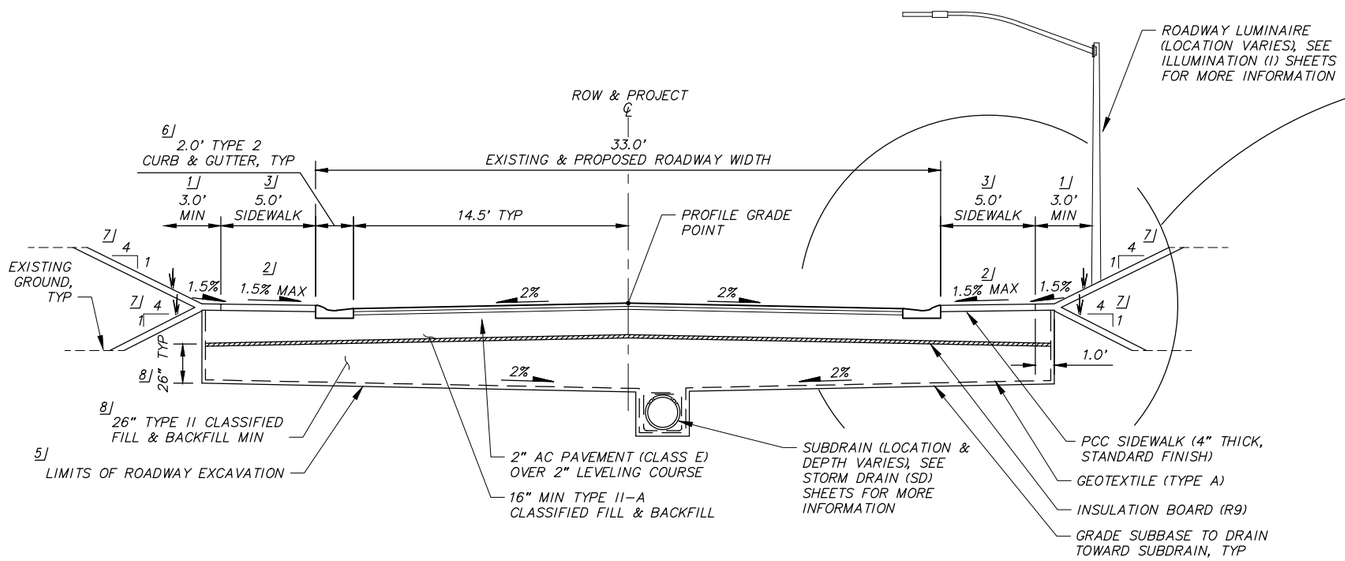

1 TYPICAL SECTION "A" IMAGE DRIVE / DEFIANCE STREET

IMAGE DRIVE: BOP TO STA 43+42
STA 55+19 TO EOP
DEFIANCE STREET: STA 28+20 TO EOP

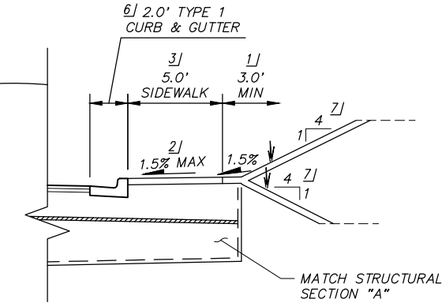

2 TYPICAL SECTION "A1" IMAGE DRIVE

IMAGE DRIVE: BOP, RT TO STA. 43+41.82, RT

TYPICAL SECTION "B" CROSS SLOPE SUMMARY				
STREET	FROM STA	TO STA	CROSS SLOPE	REMARKS
IMAGE DRIVE	43+42	44+13	VARIES	CROSS SLOPE TRANSITION FROM 2.0% TO 2.5%, SEE INTERSECTION LAYOUT SHEET R6
IMAGE DRIVE	44+13	46+32	2.50%	
IMAGE DRIVE	46+32	46+37	VARIES	CROSS SLOPE TRANSITION FROM 2.5% TO 2.0%,
IMAGE DRIVE	46+37	55+19	2.00%	
REFLECTION DRIVE	24+81	25+77	2.00%	

NOTE: SEE SHEET NOTE 1

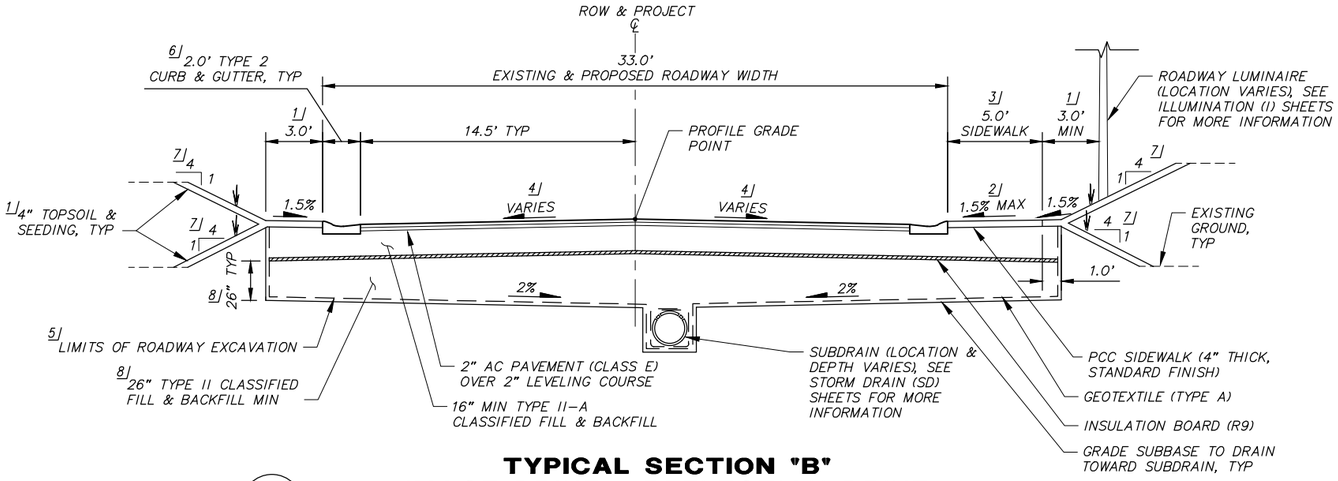

3 TYPICAL SECTION "B" IMAGE DRIVE / REFLECTION DRIVE

IMAGE DRIVE: STA. 43+42 TO STA. 55+19
REFLECTION DRIVE: STA. 24+81 TO STA. 25+78

SHEET NOTES:

1. THE STATION RANGES ARE APPROXIMATE AND MAY BE MODIFIED IN THE FIELD BY THE ENGINEER.

FOOT NOTES:

1./ PLACE 4" OF TOPSOIL AND SEEDING (SCHEDULE A) ON ALL DISTURBED AREAS.

2./ THE MAXIMUM SIDEWALK CROSS SLOPE GRADE IS 2% AT DRIVEWAYS.

3./ INCREASE SIDEWALK THICKNESS TO 6" ACROSS ALL DRIVEWAYS & ADD WELDED STEEL WIRE REINFORCEMENT PER THE SPECIFICATIONS.

4./ FOR PROPOSED CROSS SLOPES, SEE TYPICAL CROSS SLOPE SUMMARY TABLE THIS SHEET.

5./ PRIOR TO PLACEMENT OF FILL, NATIVE MATERIAL SHALL BE SCARIFIED, PROOF-ROLLED AND COMPACTED AS DIRECTED BY ENGINEER. THIS WORK SHALL BE INCIDENTAL TO THE CONTRACT AND NO SEPARATE PAYMENT SHALL BE MADE.

6./ TOP AC PAVEMENT SHALL BE ⅛" – ¼" ABOVE LIP OF CURB, UNLESS OTHERWISE NOTED. SEE DETAIL 3, SHEET C3.

7./ THE TYPICAL CUT/FILL SLOPES ARE 4 (HORIZONTAL): 1 (VERTICAL). MODIFY TYPICAL CUT/FILL SLOPES TO A MAXIMUM (STEEPEST) CUT/FILL SLOPE OF 2 (HORIZONTAL): 1 (VERTICAL) AS REQUIRED TO MATCH EXISTING GROUND WITHIN ROW. FILL SLOPES MAY VARY ALONG ROADWAY TO PROVIDE POSITIVE DRAINAGE TOWARD ROADWAY. SEE DETAIL 2, SHEET C3. SEE ROADWAY SHEETS FOR LOCATIONS. THE ENGINEER MAY ADJUST THE TYPICAL SLOPES IN THE FIELD.

8./ THE MINIMUM 26" DEPTH OF TYPE II CLASSIFIED FILL & BACKFILL MATERIAL IS MEASURED AT THE EDGE OF EXCAVATION.

RECORD DRAWING

1. DATA PROVIDED BY: _____ TITLE: _____
THIS WILL SERVE TO CERTIFY THAT THESE RECORD DRAWINGS ARE A TRUE AND ACCURATE REPRESENTATION OF THE PROJECT AS CONSTRUCTED.
CONTRACTOR: _____
BY: _____ TITLE: _____ DATE: _____
2. DATA TRANSFERRED BY: _____ TITLE: _____
COMPANY: _____ DATE: _____
3. BASED ON PERIODIC FIELD OBSERVATIONS BY THE ENGINEER (OR AN INDIVIDUAL UNDER HIS/HER DIRECT SUPERVISION), THE CONTRACTOR-PROVIDED DATA APPEARS TO REPRESENT THE PROJECT AS CONSTRUCTED.
DATA TRANSFER CHECKED BY: _____ TITLE: _____
COMPANY: _____ DATE: _____
BY: _____

DATA	DRAWN BY	CHECKED BY
BASE	TS	MJ
TOPOGRAPHY	TS	MJ
PROFILE	RB	JK
STORM SEWER	JH	JK
WATER/SANITARY SEWER	MV	JK
GAS	MV	JK
TELEPHONE	MV	JK
ELECTRIC	TK	BM
DESIGN	RB	JK
QUANTITIES	RB	JK
PRELIMINARY/FINAL	RB	JK
MUNICIPAL/STATE	RB	JK
PLAN CHECK		

FIELD BOOKS
DESIGN CRW Books 147, 148, & 151
STAKING
ASBUILT
CONTRACTOR
INSPECTOR
CONSTRUCTION RECORD

BM NO.	LOCATION	ELEV.
GAAB 66	See page D-24 of the MOA Benchmark Book	238.10
GAAB 96	See page D-26 of the MOA Benchmark Book	313.83
BASIS OF THIS DATUM GAAB 1972 ADJUST		
VERTICAL DATUM		

REV	DATE	DESCRIPTION	BY
REVISIONS			

CRW ENGINEERING GROUP, LLC
3940 ARCTIC BLVD. SUITE 300
ANCHORAGE, ALASKA 99503
PHONE: (907) 562-3252
#AECL882-AK
CONSULTANT

STATE OF ALASKA 49TH Justin T. Keene CE-11775 REGISTERED PROFESSIONAL ENGINEER
SEAL

MUNICIPALITY OF ANCHORAGE

PROJECT MANAGEMENT AND ENGINEERING DEPARTMENT

14-50 IMAGE DRIVE / REFLECTION DRIVE AREA ROAD RECONSTRUCTION – PHASE 2 SCHED A

TYPICAL SECTIONS

SCALE HOR. N/A VER. N/A | GRID SW1638, SW1738 | DATE SEPT 2019 | STATUS 65% | SHEET C1 of C3

File:J:\JobsData\10133.00 Image Reflection Area Reconstruction\00 CADD\01 Working Set\01 Civil\Phase 2\10133.00 Typical Sections - Phase 2.dwg

SHEET NOTES:

1. THE STATION RANGES ARE APPROXIMATE AND MAY BE MODIFIED IN THE FIELD BY THE ENGINEER.

FOOT NOTES:

1.] PLACE 4" OF TOPSOIL AND SEEDING (SCHEDULE A) ON ALL DISTURBED AREAS.

2.] THE MAXIMUM SIDEWALK CROSS SLOPE GRADE IS 2% AT DRIVEWAYS.

3.] INCREASE SIDEWALK THICKNESS TO 6" ACROSS ALL DRIVEWAYS & ADD WELDED STEEL WIRE REINFORCEMENT PER THE SPECIFICATIONS.

4.] ROADWAY CROSS SLOPE VARIES AT SOME LOCATIONS ALONG SIDE STREETS. SEE INTERSECTION LAYOUT SHEETS FOR LOCATIONS. MODIFY ROADWAY CROSS SLOPE AS REQUIRED TO MATCH INTO EXISTING ROADWAY OR AS DIRECTED IN THE FIELD BY THE ENGINEER. PROVIDE SMOOTH TRANSITION TO MATCH EXISTING AND TO PROVIDE POSITIVE DRAINAGE TOWARD DRAINAGE STRUCTURES.

5.] PRIOR TO PLACEMENT OF FILL, NATIVE MATERIAL SHALL BE SCARIFIED, PROOF-ROLLED AND COMPACTED AS DIRECTED BY ENGINEER. THIS WORK SHALL BE INCIDENTAL TO THE CONTRACT AND NO SEPARATE PAYMENT SHALL BE MADE.

6.] TOP AC PAVEMENT SHALL BE ⅛" – ¼" ABOVE LIP OF CURB, UNLESS OTHERWISE NOTED. SEE DETAIL 3, SHEET C3.

7.] THE TYPICAL CUT/FILL SLOPES ARE 4 (HORIZONTAL): 1 (VERTICAL). MODIFY TYPICAL CUT/FILL SLOPES TO A MAXIMUM (STEEPEST) CUT/FILL SLOPE OF 2 (HORIZONTAL): 1 (VERTICAL) AS REQUIRED TO MATCH EXISTING GROUND WITHIN ROW. FILL SLOPES MAY VARY ALONG ROADWAY TO PROVIDE POSITIVE DRAINAGE TOWARD ROADWAY. SEE DETAIL 2, SHEET C3. SEE ROADWAY SHEETS FOR LOCATIONS. THE ENGINEER MAY ADJUST THE TYPICAL SLOPES IN THE FIELD.

8.] THE MINIMUM 26" DEPTH OF TYPE II CLASSIFIED FILL & BACKFILL MATERIAL IS MEASURED AT THE EDGE OF EXCAVATION.

9.] SEE TYPICAL SECTION "D" SUMMARY

10.] SEE INTERSECTION/CURB LAYOUT SHEET R12 FOR CROSS SLOPE AND LANE WIDTHS.

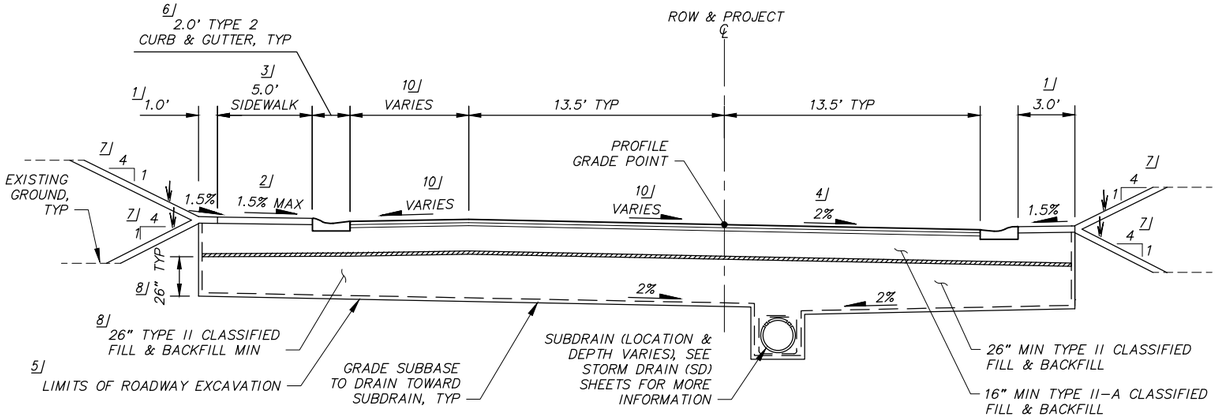

TYPICAL SECTION "C"
DEFIANCE STREET

1

STA. 25+77 TO STA. 28+20

TYPICAL SECTION "D" SUMMARY			
STREET	FROM STA	TO STA	LANE WIDTH (FT)
MIRAGE CIRCLE	60+75	62+00	13.5
	62+00	65+11	15.0
KEYANN CIRCLE	70+00	72+86	13.5
IMAGE CIRCLE	80+00	81+69	14.5

NOTE: SEE SHEET NOTE 1

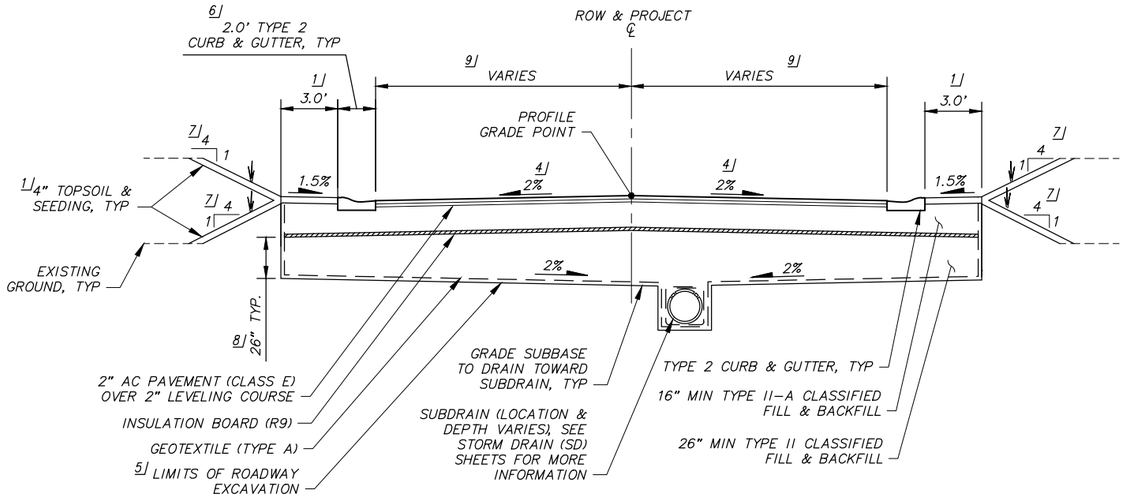

TYPICAL SECTION "D"
SIDE STREETS WITHOUT SIDEWALK

2

SEE TYPICAL SECTION "D" SUMMARY TABLE

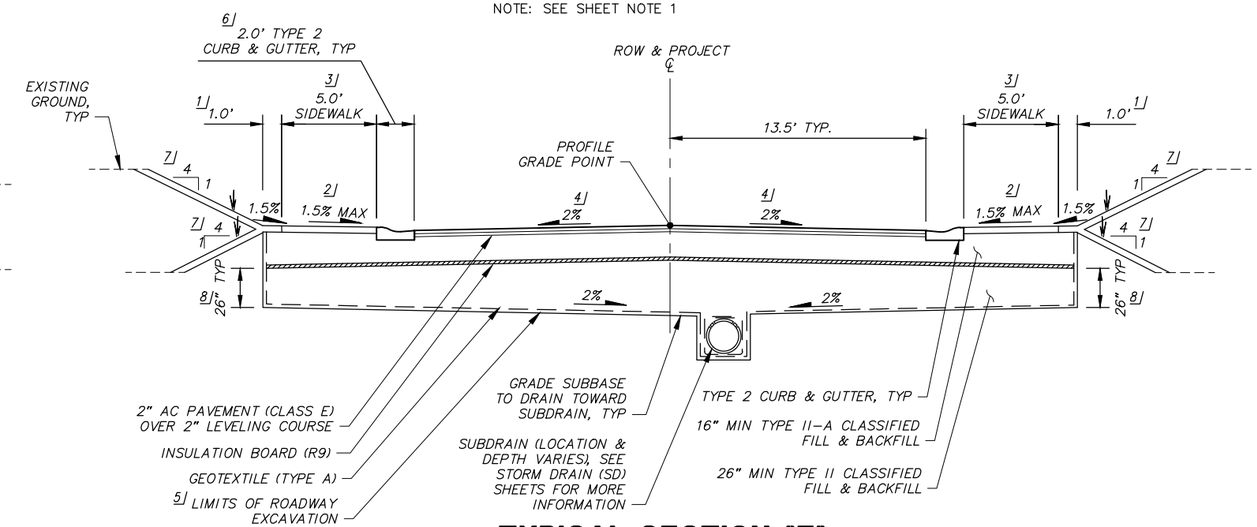

TYPICAL SECTION "E"
RIDGELAKE CIRCLE

3

STA. 90+00 TO STA. 93+22

RECORD DRAWING

1. DATA PROVIDED BY: _____ TITLE: _____
   THIS WILL SERVE TO CERTIFY THAT THESE RECORD DRAWINGS ARE A TRUE AND ACCURATE REPRESENTATION OF THE PROJECT AS CONSTRUCTED.
   CONTRACTOR: _____
   BY: _____ TITLE: _____ DATE: _____
2. DATA TRANSFERRED BY: _____ TITLE: _____
   COMPANY: _____ DATE: _____
3. BASED ON PERIODIC FIELD OBSERVATIONS BY THE ENGINEER (OR AN INDIVIDUAL UNDER HIS/HER DIRECT SUPERVISION), THE CONTRACTOR-PROVIDED DATA APPEARS TO REPRESENT THE PROJECT AS CONSTRUCTED.
   DATA TRANSFER CHECKED BY: _____ TITLE: _____
   COMPANY: _____ DATE: _____
   BY: _____

DATA	DRAWN BY	CHECKED BY
BASE	TS	MJ
TOPOGRAPHY	TS	MJ
PROFILE	RB	JK
STORM SEWER	JH	JK
WATER/SANITARY SEWER	MV	JK
GAS	MV	JK
TELEPHONE	MV	JK
ELECTRIC	TK	BM
DESIGN	RB	JK
QUANTITIES	RB	JK
PRELIMINARY/FINAL	RB	JK
MUNICIPAL/STATE	RB	JK

PLAN CHECK

FIELD BOOKS	BM NO.	LOCATION	ELEV.
DESIGN CRW Books 147, 148, & 151	GAAB 66	See page D-24 of the MOA Benchmark Book	238.10
	GAAB 96	See page D-26 of the MOA Benchmark Book	313.83
STAKING			
ASBUILT			
CONTRACTOR	BASIS OF THIS DATUM GAAB 1972 ADJUST		
INSPECTOR			

CONSTRUCTION RECORD — VERTICAL DATUM

REV	DATE	DESCRIPTION	BY

REVISIONS

CRW ENGINEERING GROUP, LLC
3940 ARCTIC BLVD. SUITE 300
ANCHORAGE, ALASKA 99503
PHONE: (907) 562-3252
#AECL682-AK

CONSULTANT

STATE OF ALASKA 49TH Justin T. Keene CE-11775 REGISTERED PROFESSIONAL ENGINEER

SEAL

MUNICIPALITY OF ANCHORAGE

PROJECT MANAGEMENT AND ENGINEERING DEPARTMENT

14-50 IMAGE DRIVE / REFLECTION DRIVE AREA ROAD RECONSTRUCTION – PHASE 2 SCHED A

TYPICAL SECTIONS

SCALE HOR. N/A VER. N/A | GRID SW1638, SW1738 | DATE SEPT 2019 | STATUS 65% | SHEET C2 of C3

File: J:\JobsData\10133.00 Image Reflection Area Reconstruction\00 CADD\01 Working Set\01 Civil\Phase 2\10133.00 Typical Sections - Phase 2.dwg

FOOT NOTES:

1.] PLACE 4" OF TOPSOIL AND SEEDING (SCHEDULE A) ON ALL DISTURBED AREAS.

2.] SEE RECONSTRUCT DRIVEWAY SUMMARY TABLE & RECONSTRUCT DRIVEWAY DETAILS FOR DRIVEWAY RECONSTRUCTION INFORMATION.

3.] INSTALL INSULATION ADJACENT TO DRIVEWAY AND TRANSITION TO DRIVEWAY SECTION PER DETAIL 3, SHEET C2.

4.] SEE RECONSTRUCT DRIVEWAY SUMMARY TABLE & RECONSTRUCTION OF DRIVEWAY DETAILS FOR DRIVEWAY RECONSTRUCTION INFORMATION.

SHEET NOTES:

1. SEE SHEETS C1–C2 FOR ADJOINING ROADWAY SECTION.

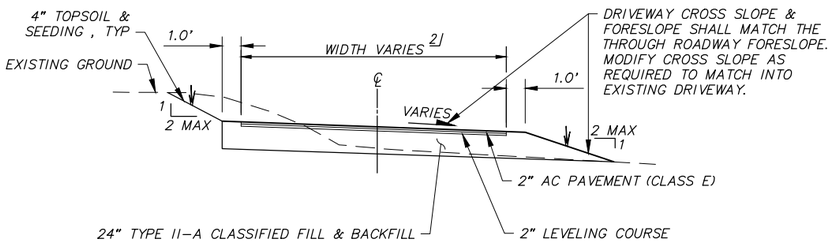

4]

1 TYPICAL SECTION "F" DRIVEWAY PAVED

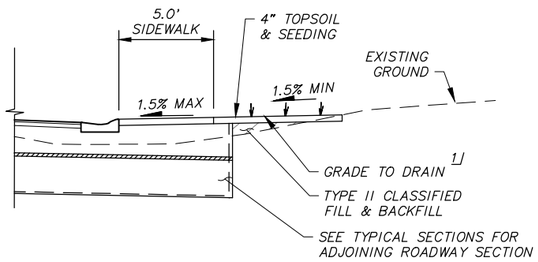

WITH ATTACHED SIDEWALK

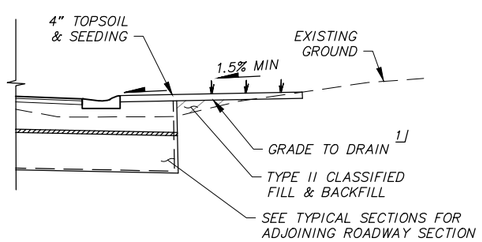

NO SIDEWALK

2 SPECIAL FILL GRADING DETAILS

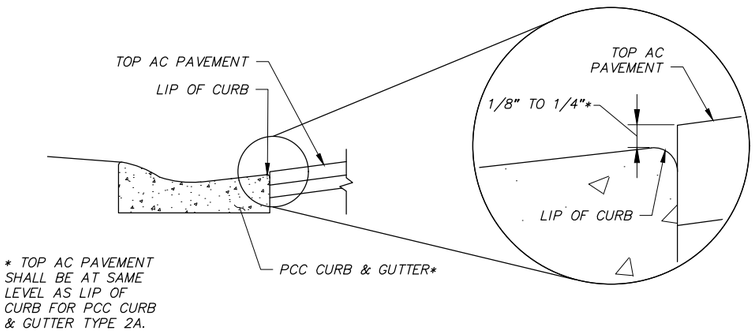

* TOP AC PAVEMENT SHALL BE AT SAME LEVEL AS LIP OF CURB FOR PCC CURB & GUTTER TYPE 2A.

3 CURB AND GUTTER & AC PAVEMENT EDGE DETAIL

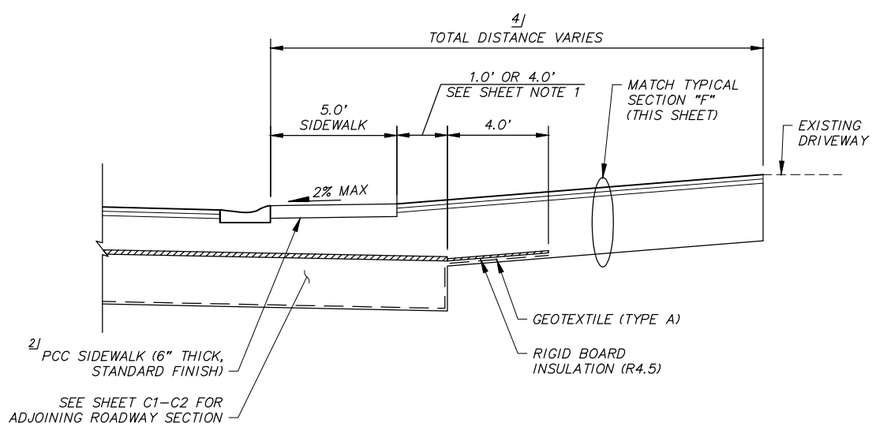

DRIVEWAY WITH ATTACHED SIDEWALK

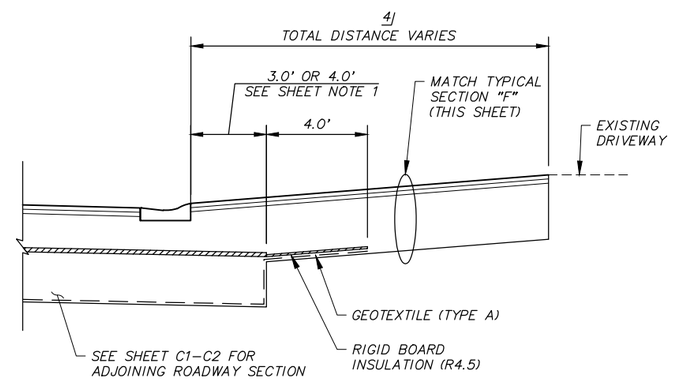

DRIVEWAY WITH NO SIDEWALK

4 TYPICAL DRIVEWAY CONNECTION SECTION

RECORD DRAWING

1. DATA PROVIDED BY: _____ TITLE: _____
   THIS WILL SERVE TO CERTIFY THAT THESE RECORD DRAWINGS ARE A TRUE AND ACCURATE REPRESENTATION OF THE PROJECT AS CONSTRUCTED.
   CONTRACTOR: _____
   BY: _____ TITLE: _____ DATE: _____
2. DATA TRANSFERRED BY: _____ TITLE: _____
   COMPANY: _____ DATE: _____
3. BASED ON PERIODIC FIELD OBSERVATIONS BY THE ENGINEER (OR AN INDIVIDUAL UNDER HIS/HER DIRECT SUPERVISION), THE CONTRACTOR–PROVIDED DATA APPEARS TO REPRESENT THE PROJECT AS CONSTRUCTED.
   DATA TRANSFER CHECKED BY: _____ TITLE: _____
   COMPANY: _____ DATE: _____
   BY: _____

DATA	DRAWN BY	CHECKED BY
BASE	TS	MJ
TOPOGRAPHY	TS	MJ
PROFILE	RB	JK
STORM SEWER	JH	JK
WATER/SANITARY SEWER	MV	JK
GAS	MV	JK
TELEPHONE	MV	JK
ELECTRIC	TK	BM
DESIGN	RB	JK
QUANTITIES	RB	JK
PRELIMINARY/FINAL	RB	JK
MUNICIPAL/STATE	RB	JK
PLAN CHECK		

FIELD BOOKS
DESIGN CRW Books 147, 148, & 151
STAKING
ASBUILT
CONTRACTOR
INSPECTOR
CONSTRUCTION RECORD

BM NO.	LOCATION	ELEV.
GAAB 66	See page D–24 of the MOA Benchmark Book	238.10
GAAB 96	See page D–26 of the MOA Benchmark Book	313.83
BASIS OF THIS DATUM GAAB 1972 ADJUST		
VERTICAL DATUM		

REV	DATE	DESCRIPTION	BY
REVISIONS			

CRW ENGINEERING GROUP, LLC
3940 ARCTIC BLVD. SUITE 300
ANCHORAGE, ALASKA 99503
PHONE: (907) 562–3252
#AECL882–AK
CONSULTANT

STATE OF ALASKA 49TH Justin T. Keene CE-11775 REGISTERED PROFESSIONAL ENGINEER
SEAL

MUNICIPALITY OF ANCHORAGE

PROJECT MANAGEMENT AND ENGINEERING DEPARTMENT

14–50 IMAGE DRIVE / REFLECTION DRIVE AREA ROAD RECONSTRUCTION – PHASE 2 SCHED A

TYPICAL SECTIONS

SCALE HOR. N/A VER. N/A | GRID SW1638, SW1738 | DATE SEPT 2019 | STATUS 65% | SHEET C3 of C3

File: J:\JobsData\10133.00 Image Reflection Area Reconstruction\00 CADD\01 Working Set\01 Civil\Phase 2\10133.00 Typical Sections – Phase 2.dwg

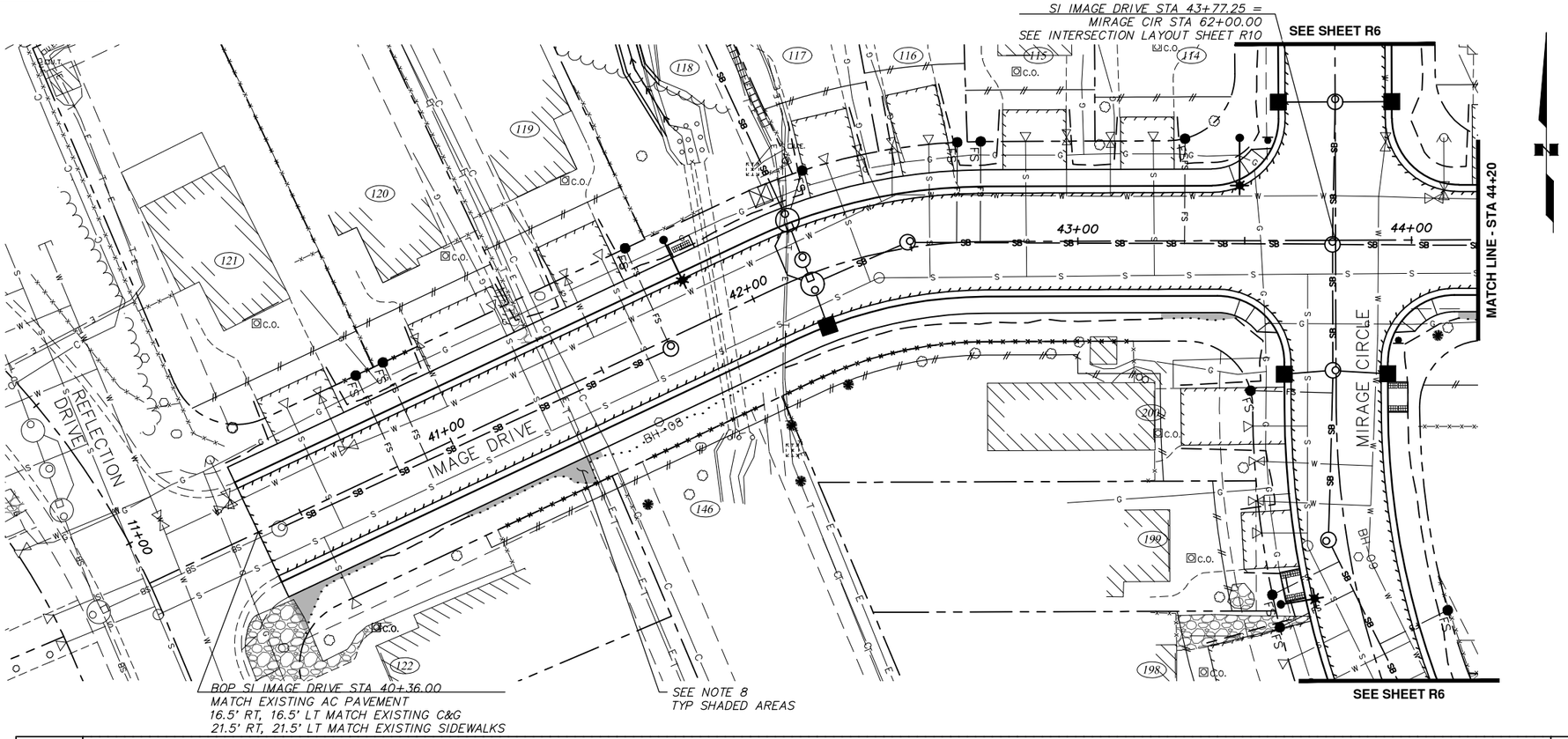

NOTES:

1. SEE ROADWAY SUMMARY TABLE (T) SHEETS FOR DETAILED ROADWAY INFORMATION.
2. SEE DETAIL (D) SHEETS FOR ROADWAY DETAILS.
3. FOR DETAILED SOILS INFORMATION, SEE THE SPECIFICATIONS.
4. SEE STORM DRAIN (SD) SHEETS FOR LOCATIONS AND ELEVATIONS OF STORM DRAIN PIPES & STRUCTURES.
5. SEE SURVEY CONTROL (V) SHEETS FOR PROJECT CENTERLINE ALIGNMENT DATA.
6. SEE ILLUMINATION (I) SHEETS FOR ROADWAY LIGHTING INFORMATION.
7. THE DEMOLITION ITEMS REMOVED AS SHOWN ON THE DEMOLITION (B) SHEETS ARE NOT SHOWN FOR CLARITY.
8. GRADE AREA TO DRAIN TOWARDS ROADWAY PER DETAIL 2, SHEET C3. NOTIFY ENGINEER IMMEDIATELY IF MIN 1.5% POSITIVE GRADE TOWARD ROADWAY CANNOT BE MAINTAINED. THIS WORK SHALL BE INCIDENTAL TO CONTRACT AND NO SEPARATE PAYMENT SHALL BE MADE.

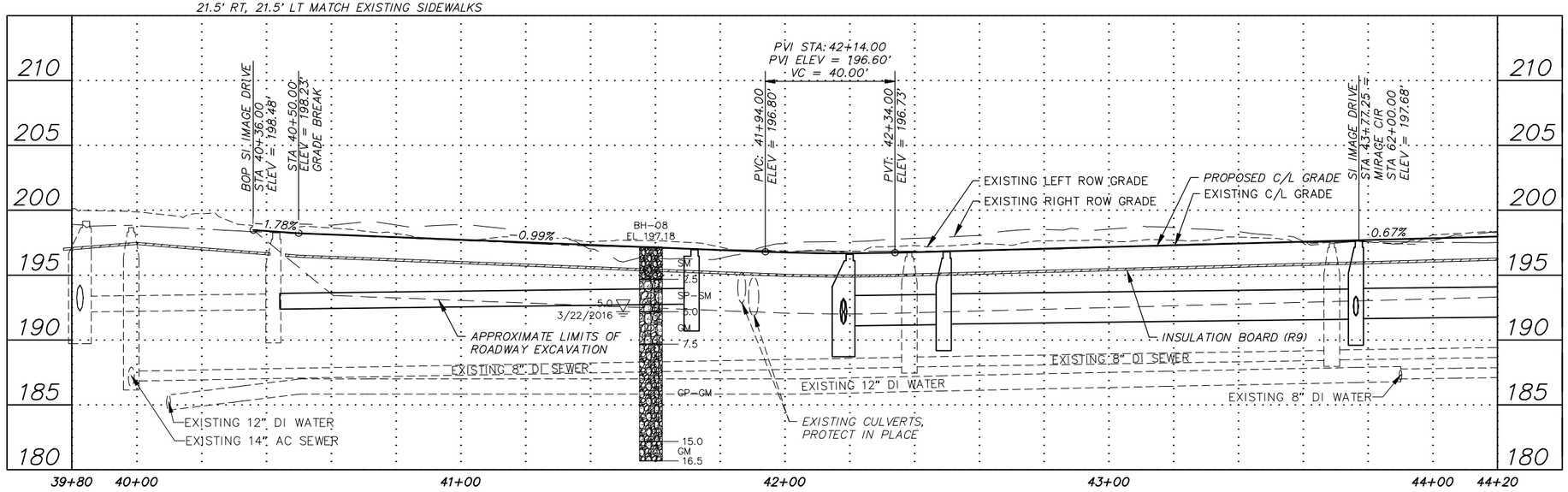

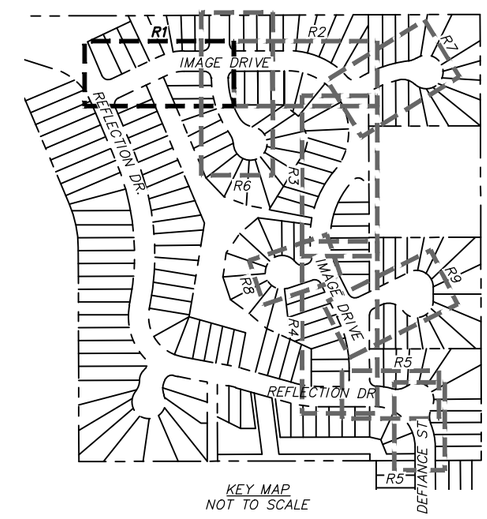

KEY MAP
NOT TO SCALE

RECORD DRAWING

1. DATA PROVIDED BY: _____ TITLE: _____
   THIS WILL SERVE TO CERTIFY THAT THESE RECORD DRAWINGS ARE A TRUE AND ACCURATE REPRESENTATION OF THE PROJECT AS CONSTRUCTED.
   CONTRACTOR: _____
   BY: _____ TITLE: _____ DATE: _____
2. DATA TRANSFERRED BY: _____ TITLE: _____
   COMPANY: _____ DATE: _____
3. BASED ON PERIODIC FIELD OBSERVATIONS BY THE ENGINEER (OR AN INDIVIDUAL UNDER HIS/HER DIRECT SUPERVISION), THE CONTRACTOR-PROVIDED DATA APPEARS TO REPRESENT THE PROJECT AS CONSTRUCTED.
   DATA TRANSFER CHECKED BY: _____ TITLE: _____
   COMPANY: _____ DATE: _____
   BY: _____

DATA	DRAWN BY	CHECKED BY
BASE	TS	MJ
TOPOGRAPHY	TS	MJ
PROFILE	RB	JK
STORM SEWER	JH	JK
WATER/SANITARY SEWER	MV	JK
GAS	MV	JK
TELEPHONE	MV	JK
ELECTRIC	TK	BM
DESIGN	RB	JK
QUANTITIES	RB	JK
PRELIMINARY/FINAL	RB	JK
MUNICIPAL/STATE	RB	JK

PLAN CHECK

GRAPHIC 40 20 0 20 40 SCALE

FIELD BOOKS	BM NO.	LOCATION	ELEV.
DESIGN CRW Books 147, 148, & 151	GAAB 66	See page D-24 of the MOA Benchmark Book	238.10
	GAAB 96	See page D-26 of the MOA Benchmark Book	313.83
STAKING			
ASBUILT			
CONTRACTOR	BASIS OF THIS DATUM GAAB 1972 ADJUST		
INSPECTOR			

CONSTRUCTION RECORD

VERTICAL DATUM

REV	DATE	DESCRIPTION	BY

REVISIONS

CRW ENGINEERING GROUP, LLC
3940 ARCTIC BLVD. SUITE 300
ANCHORAGE, ALASKA 99503
PHONE: (907) 562-3252
#AECL882-AK

CONSULTANT

STATE OF ALASKA 49 TH
Robert W. Burdick
CE-123959
REGISTERED PROFESSIONAL ENGINEER

SEAL

MUNICIPALITY OF ANCHORAGE

PROJECT MANAGEMENT AND ENGINEERING DEPARTMENT

14-50 IMAGE DRIVE / REFLECTION DRIVE AREA ROAD RECONSTRUCTION - PHASE 2 SCHED A

ROADWAY PLAN AND PROFILE

IMAGE DRIVE
BOP TO STA 44+20

SCALE HOR. 1"=20' VER. 1"=5'
GRID SW1638, SW1738
DATE SEPT 2019
STATUS 65%
SHEET R1 of R15

File: J:\JobsData\10133.00 Image Reflection Area Reconstruction\00 CADD\01 Working Set\01 Civil\Phase 2\10133.00 Plan & Profile - Roadway - Phase 2.dwg

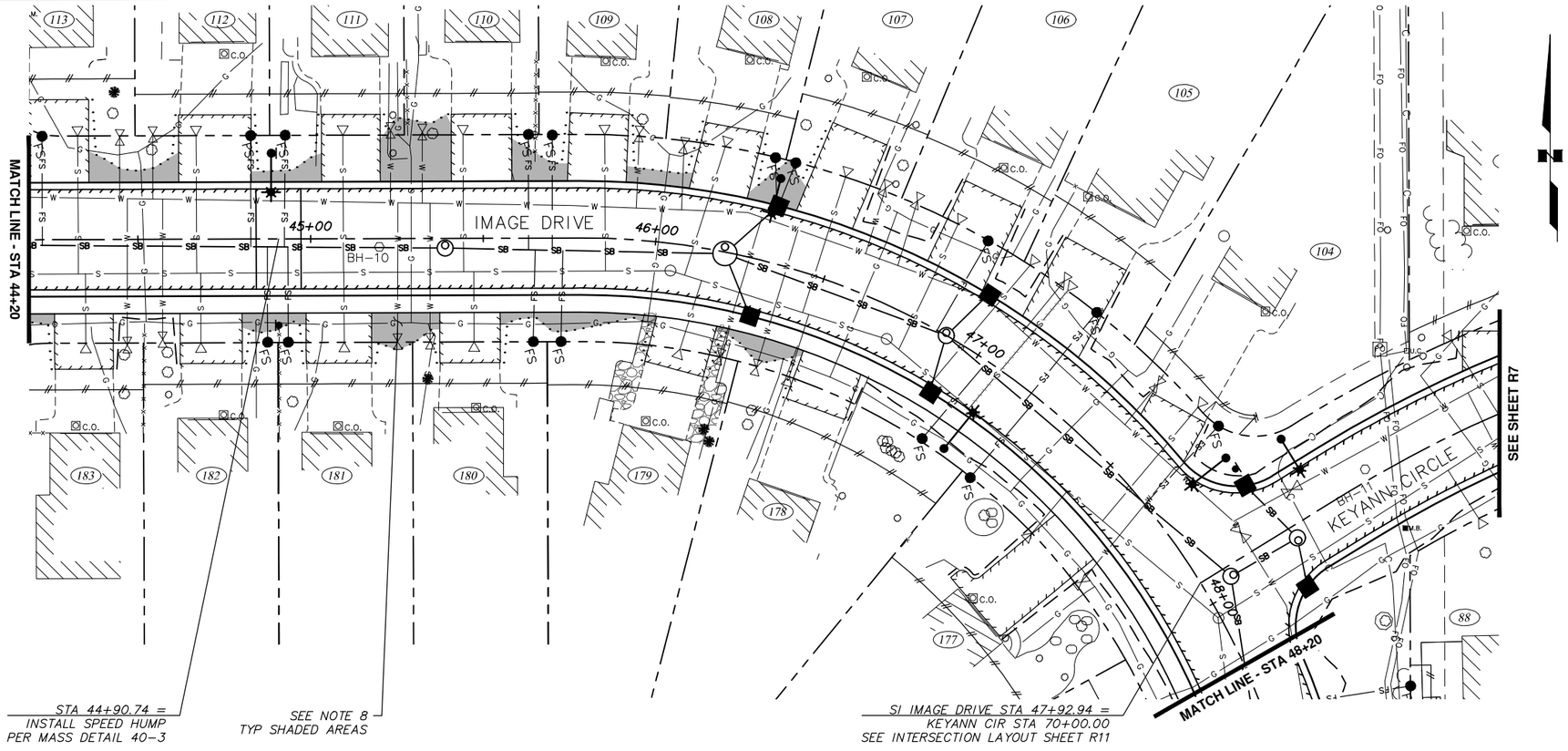

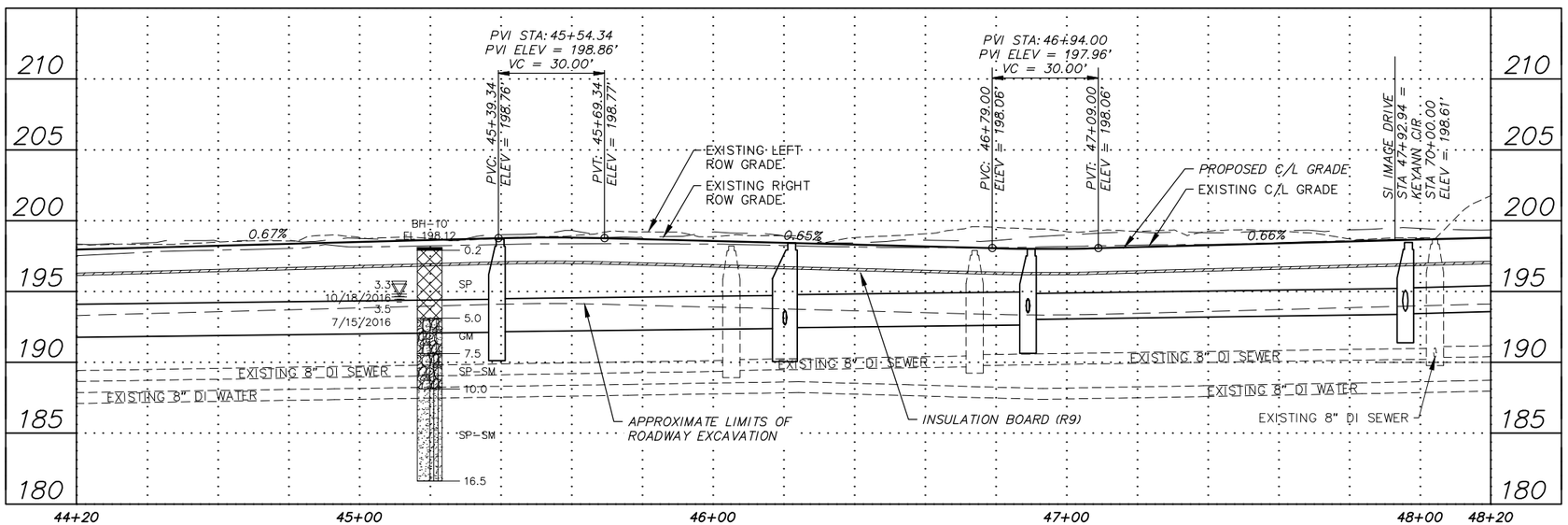

NOTES:

1. SEE ROADWAY SUMMARY TABLE (T) SHEETS FOR DETAILED ROADWAY INFORMATION.
2. SEE DETAIL (D) SHEETS FOR ROADWAY DETAILS.
3. FOR DETAILED SOILS INFORMATION, SEE THE SPECIFICATIONS.
4. SEE STORM DRAIN (SD) SHEETS FOR LOCATIONS AND ELEVATIONS OF STORM DRAIN PIPES & STRUCTURES.
5. SEE SURVEY CONTROL (V) SHEETS FOR PROJECT CENTERLINE ALIGNMENT DATA.
6. SEE ILLUMINATION (I) SHEETS FOR ROADWAY LIGHTING INFORMATION.
7. THE DEMOLITION ITEMS REMOVED AS SHOWN ON THE DEMOLITION (B) SHEETS ARE NOT SHOWN FOR CLARITY.
8. GRADE AREA TO DRAIN TOWARDS ROADWAY PER DETAIL 2, SHEET C3. NOTIFY ENGINEER IMMEDIATELY IF MIN 1.5% POSITIVE GRADE TOWARD ROADWAY CANNOT BE MAINTAINED. THIS WORK SHALL BE INCIDENTAL TO CONTRACT AND NO SEPARATE PAYMENT SHALL BE MADE.

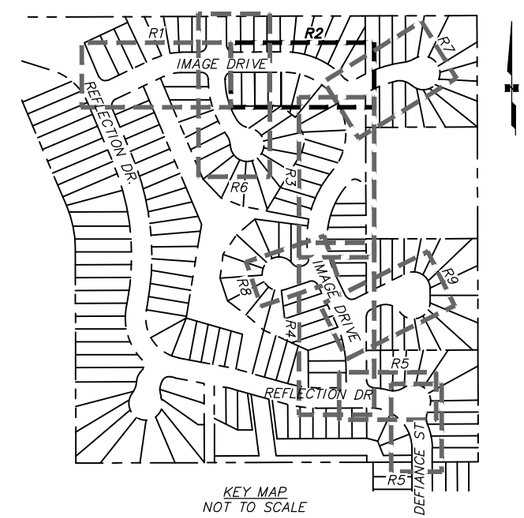

KEY MAP
NOT TO SCALE

RECORD DRAWING

1. DATA PROVIDED BY: _____ TITLE: _____
   THIS WILL SERVE TO CERTIFY THAT THESE RECORD DRAWINGS ARE A TRUE AND ACCURATE REPRESENTATION OF THE PROJECT AS CONSTRUCTED.
   CONTRACTOR: _____
   BY: _____ TITLE: _____ DATE: _____
2. DATA TRANSFERRED BY: _____ TITLE: _____
   COMPANY: _____ DATE: _____
3. BASED ON PERIODIC FIELD OBSERVATIONS BY THE ENGINEER (OR AN INDIVIDUAL UNDER HIS/HER DIRECT SUPERVISION), THE CONTRACTOR-PROVIDED DATA APPEARS TO REPRESENT THE PROJECT AS CONSTRUCTED.
   DATA TRANSFER CHECKED BY: _____ TITLE: _____
   COMPANY: _____ DATE: _____
   BY: _____

DATA	DRAWN BY	CHECKED BY
BASE	TS	MJ
TOPOGRAPHY	TS	MJ
PROFILE	RB	JK
STORM SEWER	JH	JK
WATER/SANITARY SEWER	MV	JK
GAS	MV	JK
TELEPHONE	MV	JK
ELECTRIC	TK	BM
DESIGN	RB	JK
QUANTITIES	RB	JK
PRELIMINARY/FINAL	RB	JK
MUNICIPAL/STATE	RB	JK

PLAN CHECK

GRAPHIC 40 20 0 20 40 SCALE

FIELD BOOKS	BM NO.	LOCATION	ELEV.
DESIGN CRW Books 147, 148, & 151	GAAB 66	See page D-24 of the MOA Benchmark Book	238.10
	GAAB 96	See page D-26 of the MOA Benchmark Book	313.83
STAKING			
ASBUILT			
CONTRACTOR	BASIS OF THIS DATUM GAAB 1972 ADJUST		
INSPECTOR			

CONSTRUCTION RECORD

VERTICAL DATUM

REV	DATE	DESCRIPTION	BY

REVISIONS

CRW ENGINEERING GROUP, LLC
3940 ARCTIC BLVD. SUITE 300
ANCHORAGE, ALASKA 99503
PHONE: (907) 562-3252
#AECL682-AK

CONSULTANT

STATE OF ALASKA 49 TH
Robert W. Burdick
CE-123959
REGISTERED PROFESSIONAL ENGINEER

SEAL

MUNICIPALITY OF ANCHORAGE

PROJECT MANAGEMENT AND ENGINEERING DEPARTMENT

14-50 IMAGE DRIVE / REFLECTION DRIVE AREA ROAD RECONSTRUCTION - PHASE 2 SCHED A

ROADWAY PLAN AND PROFILE

IMAGE DRIVE
STA 44+20 TO STA 48+20

SCALE HOR. 1"=20' VER. 1"=5'
GRID SW1638, SW1738
DATE SEPT 2019
STATUS 65%
SHEET R2 of R15

File: J:\JobsData\10133.00 Image Reflection Area Reconstruction\00 CADD\01 Working Set\01 Civil\Phase 2\10133.00 Plan & Profile - Roadway - Phase 2.dwg

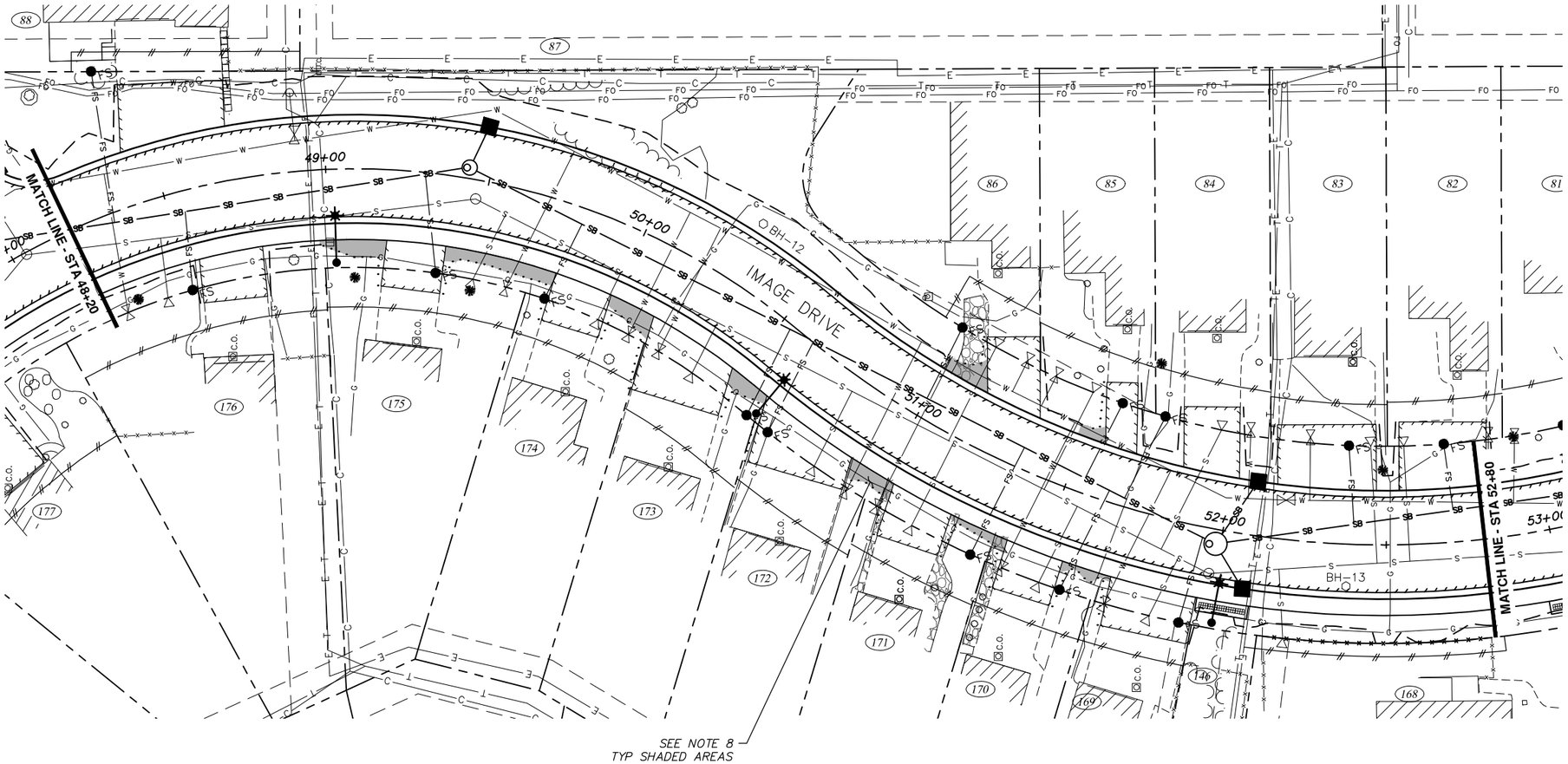

NOTES:

1. SEE ROADWAY SUMMARY TABLE (T) SHEETS FOR DETAILED ROADWAY INFORMATION.
2. SEE DETAIL (D) SHEETS FOR ROADWAY DETAILS.
3. FOR DETAILED SOILS INFORMATION, SEE THE SPECIFICATIONS.
4. SEE STORM DRAIN (SD) SHEETS FOR LOCATIONS AND ELEVATIONS OF STORM DRAIN PIPES & STRUCTURES.
5. SEE SURVEY CONTROL (V) SHEETS FOR PROJECT CENTERLINE ALIGNMENT DATA.
6. SEE ILLUMINATION (I) SHEETS FOR ROADWAY LIGHTING INFORMATION.
7. THE DEMOLITION ITEMS REMOVED AS SHOWN ON THE DEMOLITION (B) SHEETS ARE NOT SHOWN FOR CLARITY.
8. GRADE AREA TO DRAIN TOWARDS ROADWAY PER DETAIL 2, SHEET C3. NOTIFY ENGINEER IMMEDIATELY IF MIN 1.5% POSITIVE GRADE TOWARD ROADWAY CANNOT BE MAINTAINED. THIS WORK SHALL BE INCIDENTAL TO CONTRACT AND NO SEPARATE PAYMENT SHALL BE MADE.

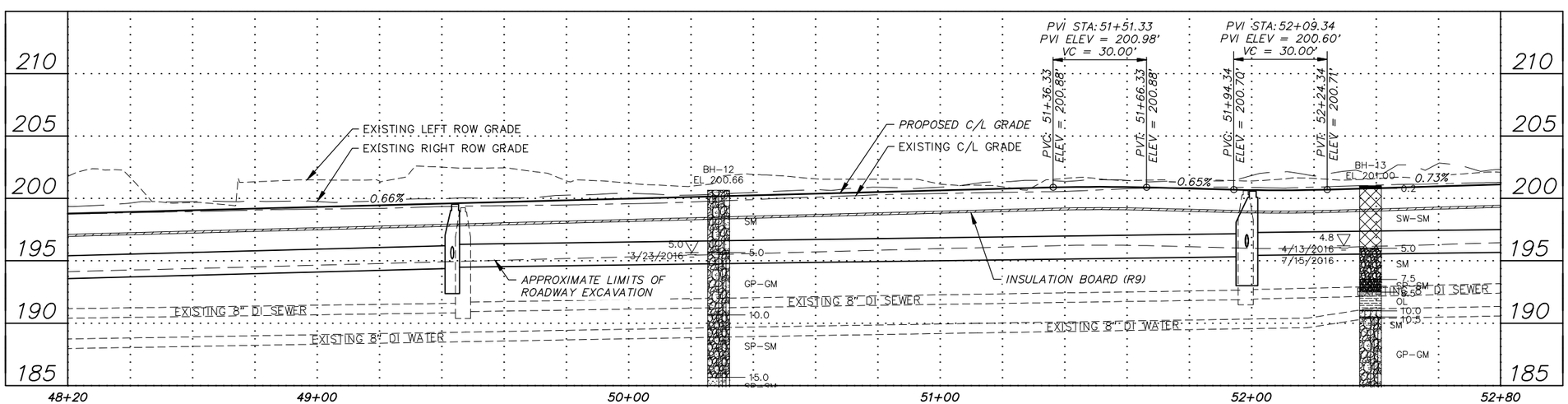

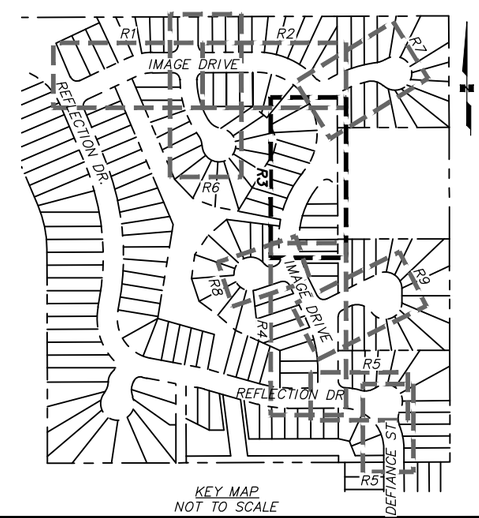

KEY MAP
NOT TO SCALE

RECORD DRAWING

1. DATA PROVIDED BY: _____ TITLE: _____
   THIS WILL SERVE TO CERTIFY THAT THESE RECORD DRAWINGS ARE A TRUE AND ACCURATE REPRESENTATION OF THE PROJECT AS CONSTRUCTED.
   CONTRACTOR: _____
   BY: _____ TITLE: _____ DATE: _____
2. DATA TRANSFERRED BY: _____ TITLE: _____
   COMPANY: _____ DATE: _____
3. BASED ON PERIODIC FIELD OBSERVATIONS BY THE ENGINEER (OR AN INDIVIDUAL UNDER HIS/HER DIRECT SUPERVISION), THE CONTRACTOR-PROVIDED DATA APPEARS TO REPRESENT THE PROJECT AS CONSTRUCTED.
   DATA TRANSFER CHECKED BY: _____ TITLE: _____
   COMPANY: _____ DATE: _____
   BY: _____

DATA	DRAWN BY	CHECKED BY
BASE	TS	MJ
TOPOGRAPHY	TS	MJ
PROFILE	RB	JK
STORM SEWER	JH	JK
WATER/SANITARY SEWER	MV	JK
GAS	MV	JK
TELEPHONE	MV	JK
ELECTRIC	TK	BM
DESIGN	RB	JK
QUANTITIES	RB	JK
PRELIMINARY/FINAL	RB	JK
MUNICIPAL/STATE	RB	JK

PLAN CHECK

GRAPHIC 40 20 0 20 40 SCALE

FIELD BOOKS	BM NO.	LOCATION	ELEV.
DESIGN CRW Books 147, 148, & 151	GAAB 66	See page D-24 of the MOA Benchmark Book	238.10
	GAAB 96	See page D-26 of the MOA Benchmark Book	313.83
STAKING			
ASBUILT			
CONTRACTOR	BASIS OF THIS DATUM GAAB 1972 ADJUST		
INSPECTOR			

CONSTRUCTION RECORD

VERTICAL DATUM

REV	DATE	DESCRIPTION	BY

REVISIONS

CRW ENGINEERING GROUP, LLC
3940 ARCTIC BLVD. SUITE 300
ANCHORAGE, ALASKA 99503
PHONE: (907) 562-3252
#ACL882-AK

CONSULTANT

STATE OF ALASKA 49 TH
Robert W. Burdick
CE-123959
REGISTERED PROFESSIONAL ENGINEER

SEAL

MUNICIPALITY OF ANCHORAGE

PROJECT MANAGEMENT AND ENGINEERING DEPARTMENT

14-50 IMAGE DRIVE / REFLECTION DRIVE AREA ROAD RECONSTRUCTION – PHASE 2 SCHED A

ROADWAY PLAN AND PROFILE

IMAGE DRIVE
STA 48+20 TO STA 52+80

SCALE HOR. 1"=20' VER. 1"=5' | GRID SW1638, SW1738 | DATE SEPT 2019 | STATUS 65% | SHEET R3 of R15

File: J:\JobsData\10133.00 Image Reflection Area Reconstruction\00 CADD\01 Working Set\01 Civil\Phase 2\10133.00 Plan & Profile – Roadway – Phase 2.dwg

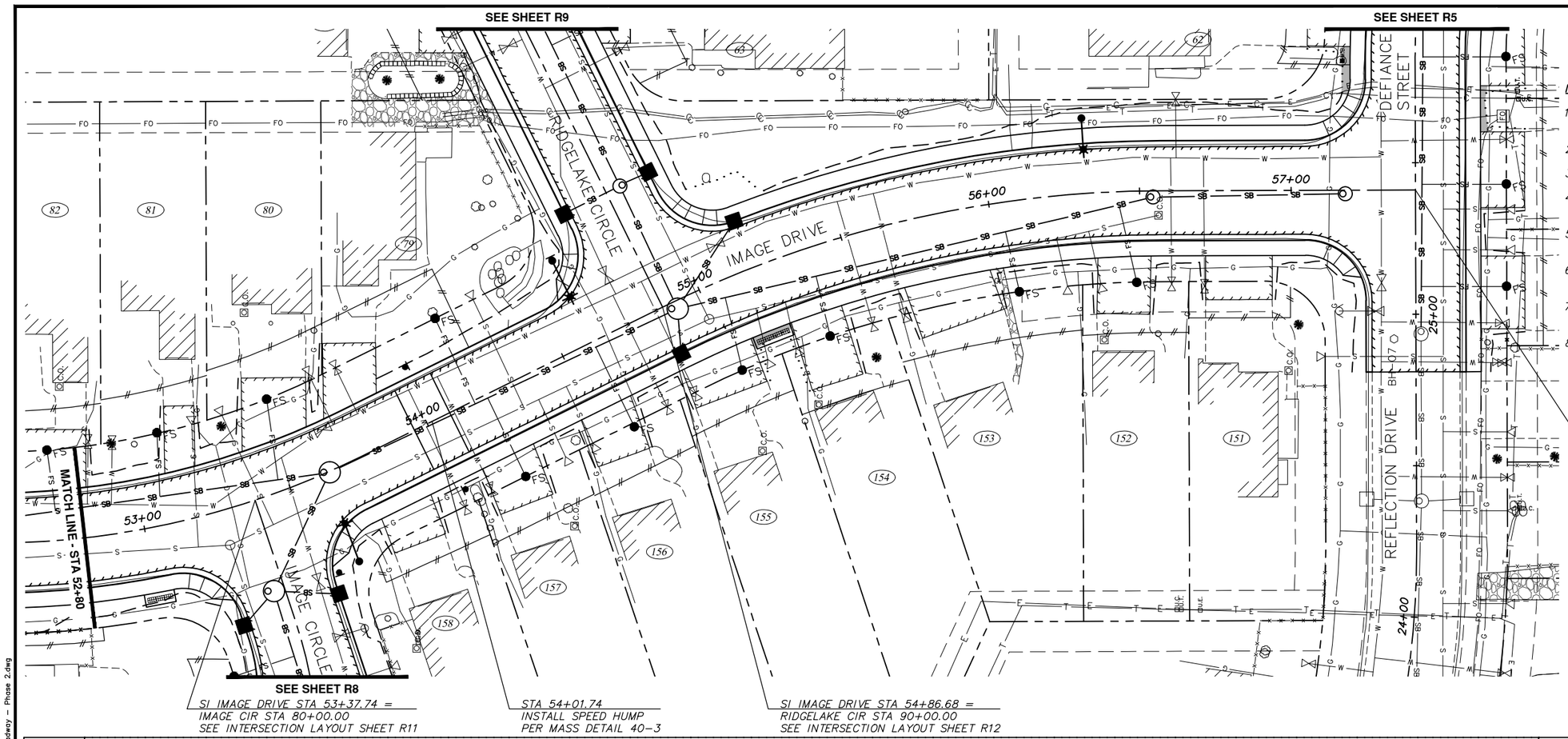

NOTES:

1. SEE ROADWAY SUMMARY TABLE (T) SHEETS FOR DETAILED ROADWAY INFORMATION.
2. SEE DETAIL (D) SHEETS FOR ROADWAY DETAILS.
3. FOR DETAILED SOILS INFORMATION, SEE THE SPECIFICATIONS.
4. SEE STORM DRAIN (SD) SHEETS FOR LOCATIONS AND ELEVATIONS OF STORM DRAIN PIPES & STRUCTURES.
5. SEE SURVEY CONTROL (V) SHEETS FOR PROJECT CENTERLINE ALIGNMENT DATA.
6. SEE ILLUMINATION (I) SHEETS FOR ROADWAY LIGHTING INFORMATION.
7. THE DEMOLITION ITEMS REMOVED AS SHOWN ON THE DEMOLITION (B) SHEETS ARE NOT SHOWN FOR CLARITY.
8. GRADE AREA TO DRAIN TOWARDS ROADWAY PER DETAIL 2, SHEET C3. NOTIFY ENGINEER IMMEDIATELY IF MIN 1.5% POSITIVE GRADE TOWARD ROADWAY CANNOT BE MAINTAINED. THIS WORK SHALL BE INCIDENTAL TO CONTRACT AND NO SEPARATE PAYMENT SHALL BE MADE.

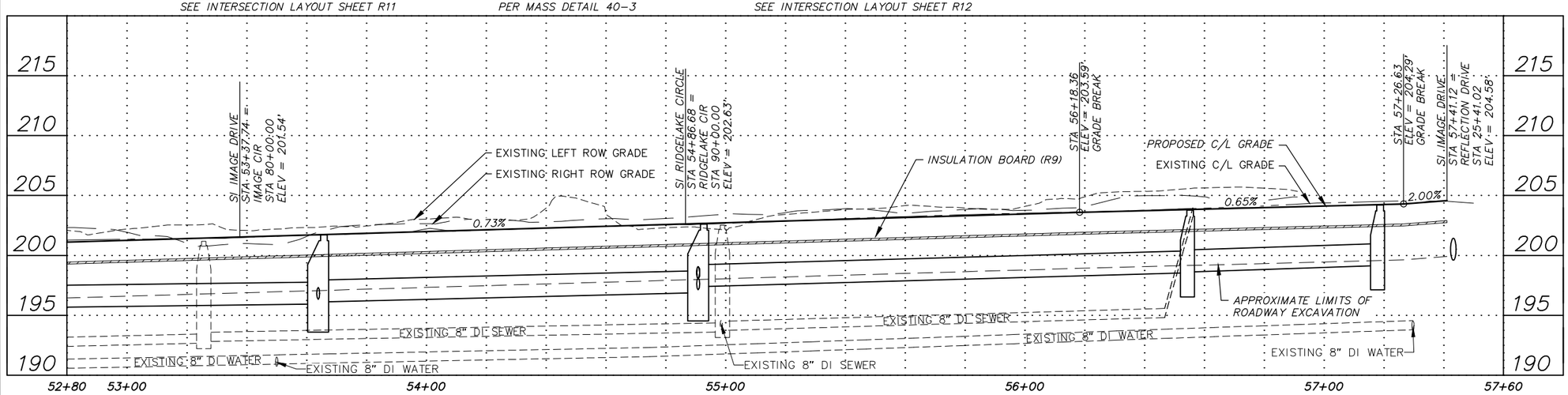

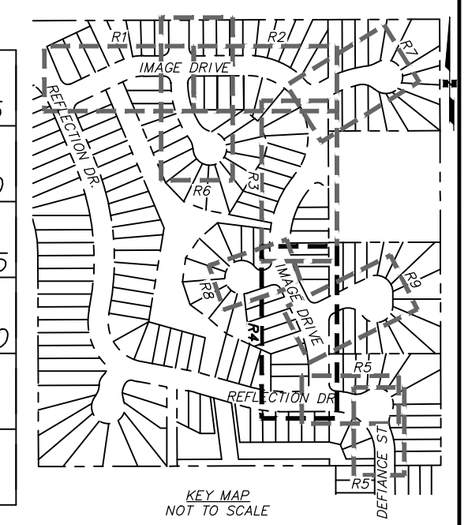

KEY MAP
NOT TO SCALE

RECORD DRAWING

1. DATA PROVIDED BY: _____ TITLE: _____
   THIS WILL SERVE TO CERTIFY THAT THESE RECORD DRAWINGS ARE A TRUE AND ACCURATE REPRESENTATION OF THE PROJECT AS CONSTRUCTED.
   CONTRACTOR: _____
   BY: _____ TITLE: _____ DATE: _____
2. DATA TRANSFERRED BY: _____ TITLE: _____
   COMPANY: _____ DATE: _____
3. BASED ON PERIODIC FIELD OBSERVATIONS BY THE ENGINEER (OR AN INDIVIDUAL UNDER HIS/HER DIRECT SUPERVISION), THE CONTRACTOR-PROVIDED DATA APPEARS TO REPRESENT THE PROJECT AS CONSTRUCTED.
   DATA TRANSFER CHECKED BY: _____ TITLE: _____
   COMPANY: _____ DATE: _____
   BY: _____

DATA	DRAWN BY	CHECKED BY
BASE	TS	MJ
TOPOGRAPHY	TS	MJ
PROFILE	RB	JK
STORM SEWER	JH	JK
WATER/SANITARY SEWER	MV	JK
GAS	MV	JK
TELEPHONE	MV	JK
ELECTRIC	TK	BM
DESIGN	RB	JK
QUANTITIES	RB	JK
PRELIMINARY/FINAL	RB	JK
MUNICIPAL/STATE	RB	JK

PLAN CHECK

GRAPHIC 40 20 0 20 40 SCALE

FIELD BOOKS	BM NO.	LOCATION	ELEV.
DESIGN CRW Books 147, 148, & 151	GAAB 66	See page D-24 of the MOA Benchmark Book	238.10
	GAAB 96	See page D-26 of the MOA Benchmark Book	313.83
STAKING			
ASBUILT			
CONTRACTOR	BASIS OF THIS DATUM GAAB 1972 ADJUST		
INSPECTOR			

CONSTRUCTION RECORD — VERTICAL DATUM

REV	DATE	DESCRIPTION	BY

REVISIONS

CRW ENGINEERING GROUP, LLC
3940 ARCTIC BLVD. SUITE 300
ANCHORAGE, ALASKA 99503
PHONE: (907) 562-3252
#ACL882-AK

CONSULTANT

STATE OF ALASKA 49TH — Robert W. Burdick CE-123959 — REGISTERED PROFESSIONAL ENGINEER

SEAL

MUNICIPALITY OF ANCHORAGE

PROJECT MANAGEMENT AND ENGINEERING DEPARTMENT

14-50 IMAGE DRIVE / REFLECTION DRIVE AREA ROAD RECONSTRUCTION - PHASE 2 SCHED A

ROADWAY PLAN AND PROFILE

IMAGE DRIVE
STA 52+80 TO STA 57+41

SCALE HOR. 1"=20' VER. 1"=5' | GRID SW1638, SW1738 | DATE SEPT 2019 | STATUS 65% | SHEET R4 of R15

File:J:\JobsData\10133.00 Image Reflection Area Reconstruction\00 CADD\01 Working Set\01 Civil\Phase 2\10133.00 Plan & Profile - Roadway - Phase 2.dwg

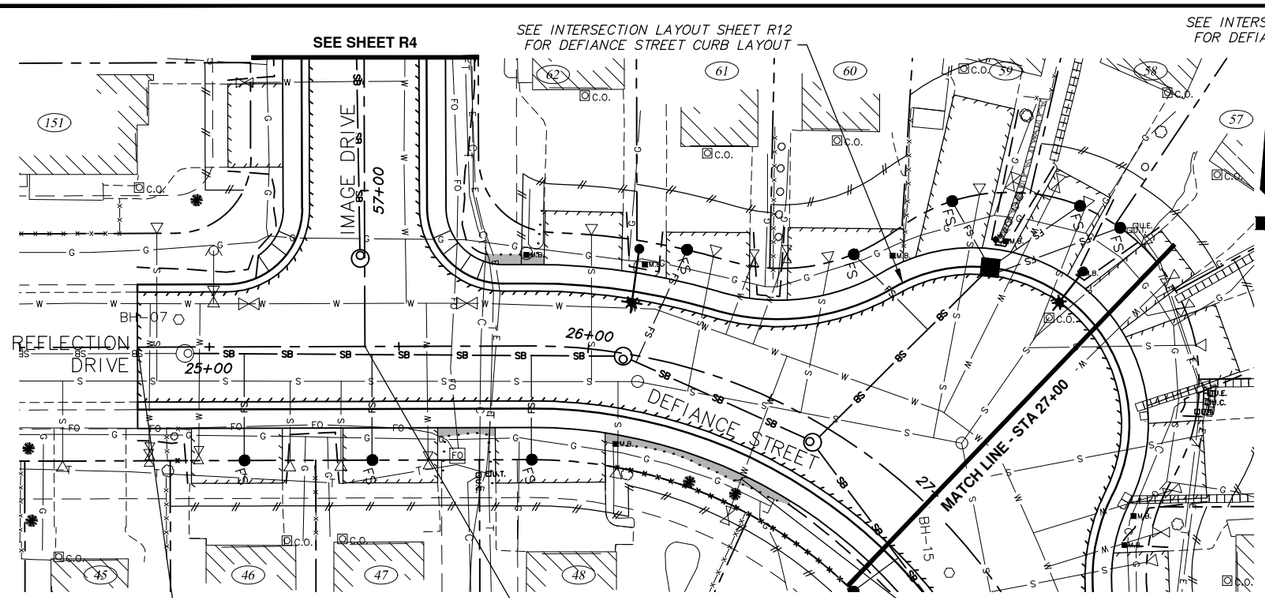

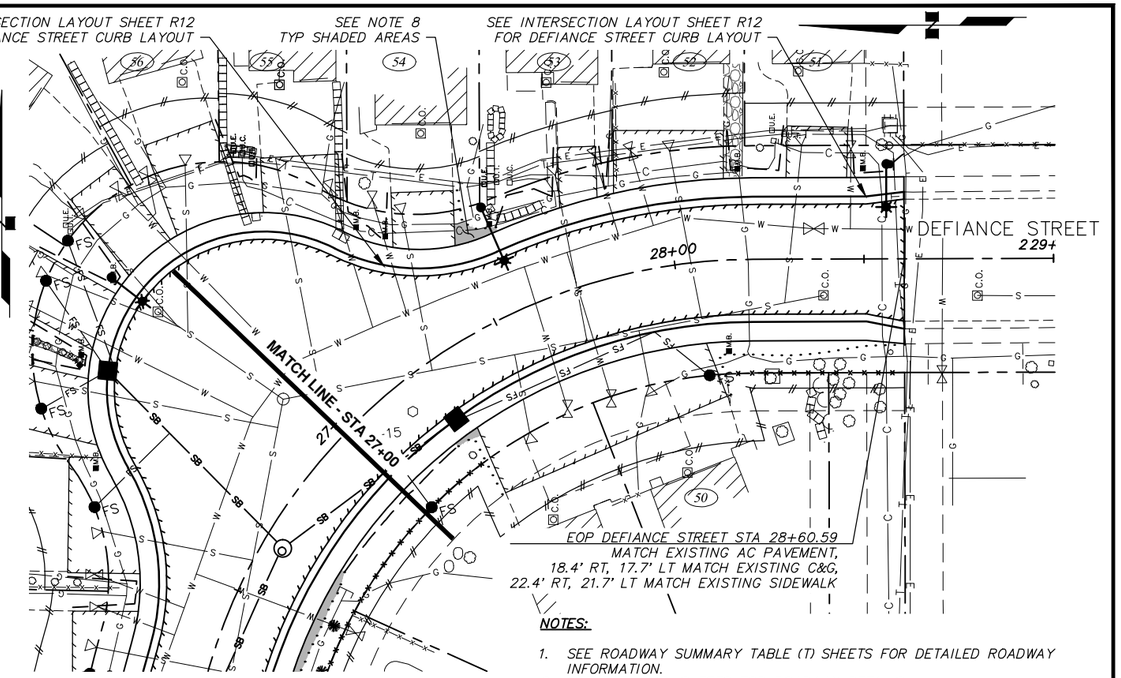

NOTES:

1. SEE ROADWAY SUMMARY TABLE (T) SHEETS FOR DETAILED ROADWAY INFORMATION.
2. SEE DETAIL (D) SHEETS FOR ROADWAY DETAILS.
3. FOR DETAILED SOILS INFORMATION, SEE THE SPECIFICATIONS.
4. SEE STORM DRAIN (SD) SHEETS FOR LOCATIONS AND ELEVATIONS OF STORM DRAIN PIPES & STRUCTURES.
5. SEE SURVEY CONTROL (V) SHEETS FOR PROJECT CENTERLINE ALIGNMENT DATA.
6. SEE ILLUMINATION (I) SHEETS FOR ROADWAY LIGHTING INFORMATION.
7. THE DEMOLITION ITEMS REMOVED AS SHOWN ON THE DEMOLITION (B) SHEETS ARE NOT SHOWN FOR CLARITY.
8. GRADE AREA TO DRAIN TOWARDS ROADWAY PER DETAIL 2, SHEET C3. NOTIFY ENGINEER IMMEDIATELY IF MIN 1.5% POSITIVE GRADE TOWARD ROADWAY CANNOT BE MAINTAINED. THIS WORK SHALL BE INCIDENTAL TO CONTRACT AND NO SEPARATE PAYMENT SHALL BE MADE.

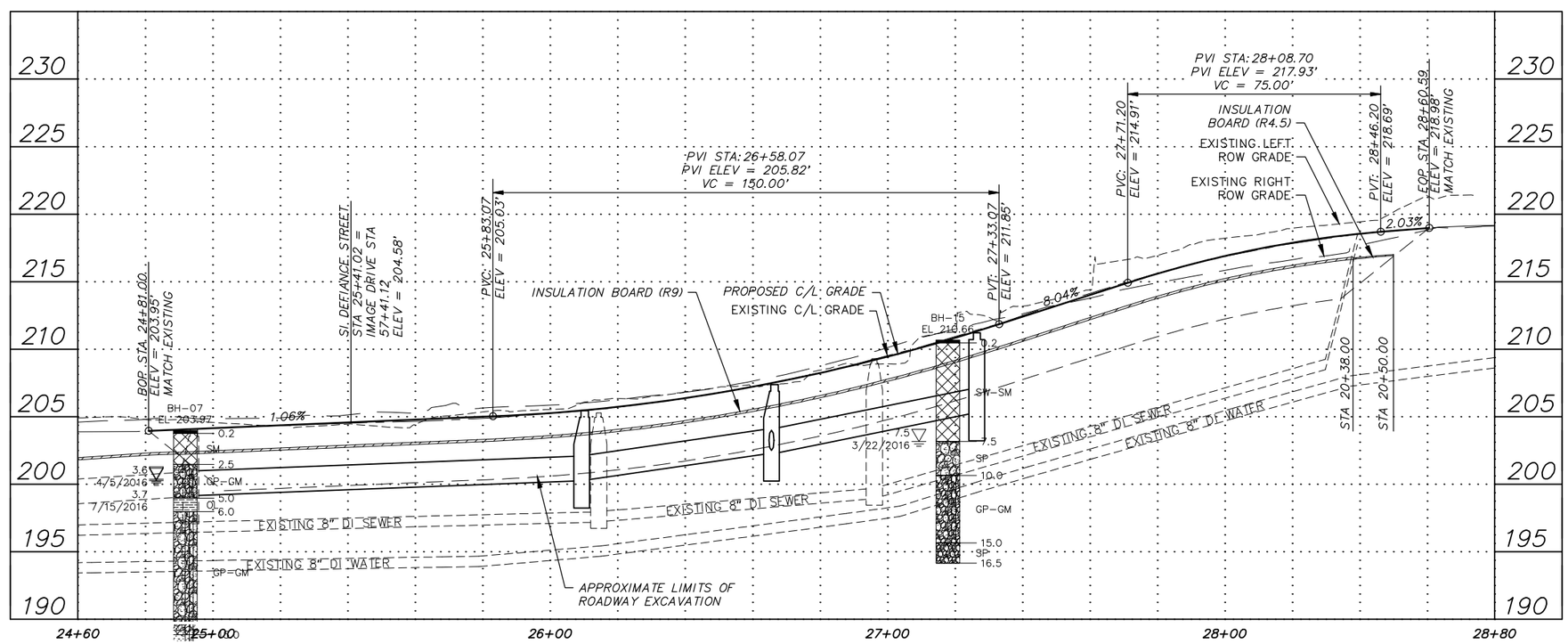

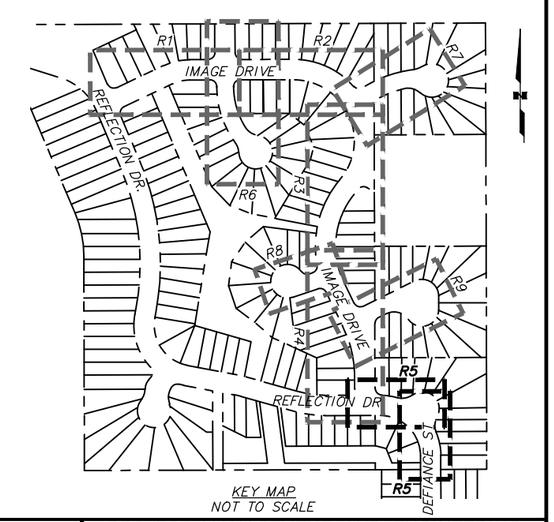

KEY MAP
NOT TO SCALE

RECORD DRAWING

1. DATA PROVIDED BY: _____ TITLE: _____
   THIS WILL SERVE TO CERTIFY THAT THESE RECORD DRAWINGS ARE A TRUE AND ACCURATE REPRESENTATION OF THE PROJECT AS CONSTRUCTED.
   CONTRACTOR: _____
   BY: _____ TITLE: _____ DATE: _____
2. DATA TRANSFERRED BY: _____ TITLE: _____
   COMPANY: _____ DATE: _____
3. BASED ON PERIODIC FIELD OBSERVATIONS BY THE ENGINEER (OR AN INDIVIDUAL UNDER HIS/HER DIRECT SUPERVISION), THE CONTRACTOR-PROVIDED DATA APPEARS TO REPRESENT THE PROJECT AS CONSTRUCTED.
   DATA TRANSFER CHECKED BY: _____ TITLE: _____
   COMPANY: _____ DATE: _____
   BY: _____

DATA	DRAWN BY	CHECKED BY
BASE	TS	MJ
TOPOGRAPHY	TS	MJ
PROFILE	RB	JK
STORM SEWER	JH	JK
WATER/SANITARY SEWER	MV	JK
GAS	MV	JK
TELEPHONE	MV	JK
ELECTRIC	TK	BM
DESIGN	RB	JK
QUANTITIES	RB	JK
PRELIMINARY/FINAL	RB	JK
MUNICIPAL/STATE	RB	JK

PLAN CHECK

GRAPHIC 40 20 0 20 40 SCALE

FIELD BOOKS	BM NO.	LOCATION	ELEV.
DESIGN CRW Books 147, 148, & 151	GAAB 66	See page D-24 of the MOA Benchmark Book	238.10
	GAAB 96	See page D-26 of the MOA Benchmark Book	313.83
STAKING			
ASBUILT			
CONTRACTOR	BASIS OF THIS DATUM GAAB 1972 ADJUST		
INSPECTOR			

CONSTRUCTION RECORD

VERTICAL DATUM

REV	DATE	DESCRIPTION	BY

REVISIONS

CRW ENGINEERING GROUP, LLC
3940 ARCTIC BLVD. SUITE 300
ANCHORAGE, ALASKA 99503
PHONE: (907) 562-3252
#AECL582-AK

CONSULTANT

STATE OF ALASKA 49TH Robert W. Burdick CE-123959 REGISTERED PROFESSIONAL ENGINEER

SEAL

MUNICIPALITY OF ANCHORAGE

PROJECT MANAGEMENT AND ENGINEERING DEPARTMENT

14-50 IMAGE DRIVE / REFLECTION DRIVE AREA ROAD RECONSTRUCTION – PHASE 2 SCHED A

ROADWAY PLAN AND PROFILE

DEFIANCE STREET
STA 24+65 TO STA 28+61

SCALE HOR. 1"=20' VER. 1"=5'

GRID SW1638, SW1738

DATE SEPT 2019

STATUS 65%

SHEET R5 of R15

File:J:\JobsData\10133.00 Image Refection Area Reconstruction\00 CADD\01 Working Set\01 Civil\Phase 2\10133.00 Plan & Profile – Roadway – Phase 2.dwg

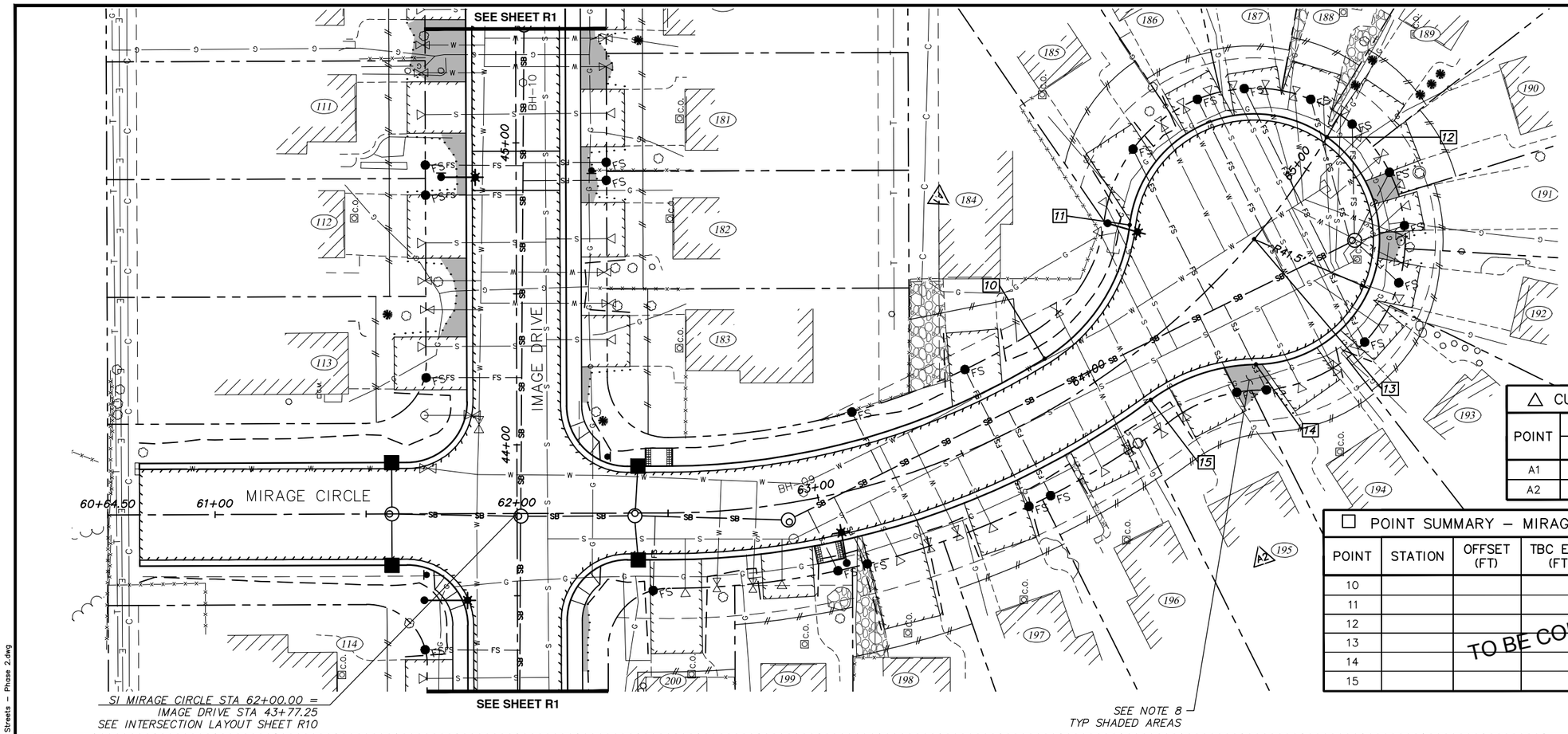

NOTES:

1. SEE ROADWAY SUMMARY TABLE (T) SHEETS FOR DETAILED ROADWAY INFORMATION.
2. SEE DETAIL (D) SHEETS FOR ROADWAY DETAILS.
3. FOR DETAILED SOILS INFORMATION, SEE THE SPECIFICATIONS.
4. SEE STORM DRAIN (SD) SHEETS FOR LOCATIONS AND ELEVATIONS OF STORM DRAIN PIPES & STRUCTURES.
5. SEE SURVEY CONTROL (V) SHEETS FOR PROJECT CENTERLINE ALIGNMENT DATA.
6. SEE ILLUMINATION (I) SHEETS FOR ROADWAY LIGHTING INFORMATION.
7. THE DEMOLITION ITEMS REMOVED AS SHOWN ON THE DEMOLITION (B) SHEETS ARE NOT SHOWN FOR CLARITY.
8. GRADE AREA TO DRAIN TOWARDS ROADWAY PER DETAIL 2, SHEET C3. NOTIFY ENGINEER IMMEDIATELY IF MIN 1.5% POSITIVE GRADE TOWARD ROADWAY CANNOT BE MAINTAINED. THIS WORK SHALL BE INCIDENTAL TO CONTRACT AND NO SEPARATE PAYMENT SHALL BE MADE.

△ CURB RADIUS TABLE

POINT	TBC RADIUS POINT		RADIUS (FT)	DESCRIPTION
	STATION	OFFSET (FT)		
A1				MIRAGE CIRCLE
A2				MIRAGE CIRCLE

TO BE COMPLETED FOR 95%

☐ POINT SUMMARY – MIRAGE CIRCLE

POINT	STATION	OFFSET (FT)	TBC ELEV (FT)	CURB TYPE	LIP OF CURB ELEV (FT)	DESCRIPTION
10						
11						
12						
13						
14						
15						

TO BE COMPLETED FOR 95%

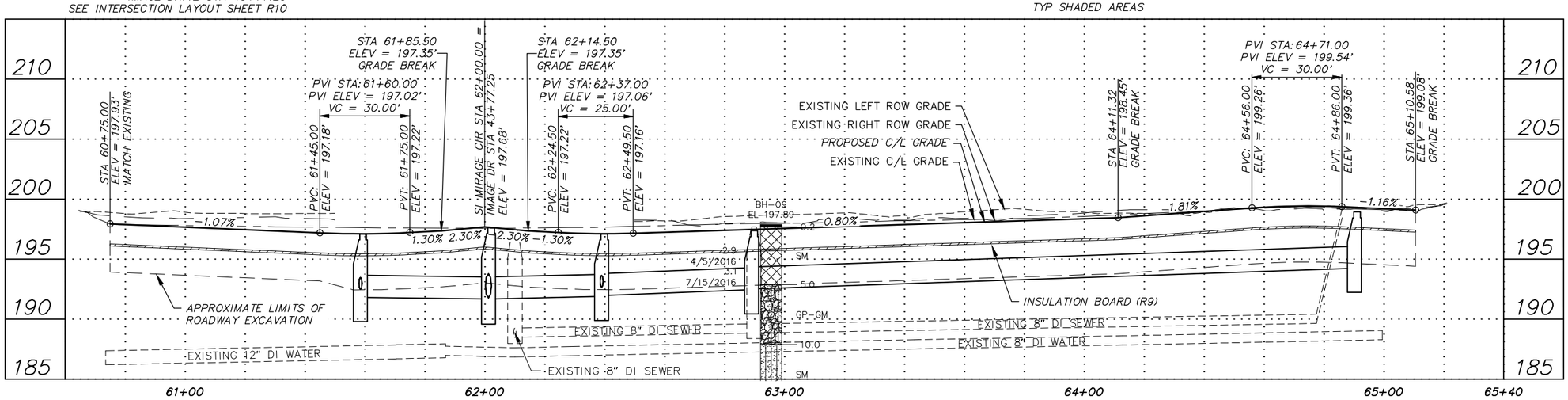

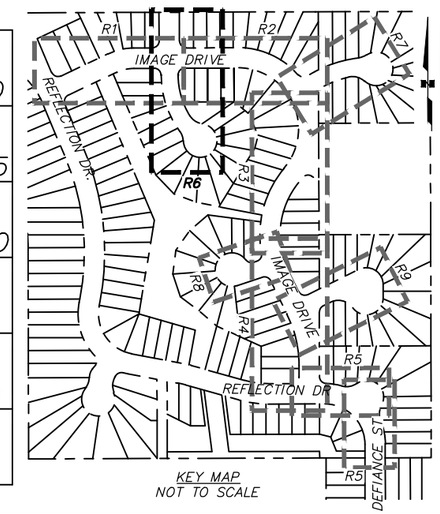

KEY MAP
NOT TO SCALE

RECORD DRAWING

1. DATA PROVIDED BY: _____ TITLE: _____
   THIS WILL SERVE TO CERTIFY THAT THESE RECORD DRAWINGS ARE A TRUE AND ACCURATE REPRESENTATION OF THE PROJECT AS CONSTRUCTED.
   CONTRACTOR: _____
   BY: _____ TITLE: _____ DATE: _____
2. DATA TRANSFERRED BY: _____ TITLE: _____
   COMPANY: _____ DATE: _____
3. BASED ON PERIODIC FIELD OBSERVATIONS BY THE ENGINEER (OR AN INDIVIDUAL UNDER HIS/HER DIRECT SUPERVISION), THE CONTRACTOR-PROVIDED DATA APPEARS TO REPRESENT THE PROJECT AS CONSTRUCTED.
   DATA TRANSFER CHECKED BY: _____ TITLE: _____
   COMPANY: _____ DATE: _____
   BY: _____

DATA	DRAWN BY	CHECKED BY
BASE	TS	MJ
TOPOGRAPHY	TS	MJ
PROFILE	RB	JK
STORM SEWER	JH	JK
WATER/SANITARY SEWER	MV	JK
GAS	MV	JK
TELEPHONE	MV	JK
ELECTRIC	TK	BM
DESIGN	RB	JK
QUANTITIES	RB	JK
PRELIMINARY/FINAL	RB	JK
MUNICIPAL/STATE	RB	JK

PLAN CHECK

GRAPHIC 40 20 0 20 40 SCALE

FIELD BOOKS
DESIGN CRW Books 147, 148, & 151
STAKING
ASBUILT
CONTRACTOR
INSPECTOR

CONSTRUCTION RECORD

BM NO.	LOCATION	ELEV.
GAAB 66	See page D-24 of the MOA Benchmark Book	238.10
GAAB 96	See page D-26 of the MOA Benchmark Book	313.83

BASIS OF THIS DATUM GAAB 1972 ADJUST

VERTICAL DATUM

REV	DATE	DESCRIPTION	BY

REVISIONS

CRW ENGINEERING GROUP, LLC
3940 ARCTIC BLVD. SUITE 300
ANCHORAGE, ALASKA 99503
PHONE: (907) 562-3252
#ACL582-AK

CONSULTANT

STATE OF ALASKA 49TH Robert W. Burdick CE-123959 REGISTERED PROFESSIONAL ENGINEER

SEAL

MUNICIPALITY OF ANCHORAGE

PROJECT MANAGEMENT AND ENGINEERING DEPARTMENT

14-50 IMAGE DRIVE / REFLECTION DRIVE AREA ROAD RECONSTRUCTION – PHASE 2 SCHED A

ROADWAY PLAN AND PROFILE

MIRAGE CIRCLE

SCALE HOR. 1"=20' VER. 1"=5' | GRID SW1638, SW1738 | DATE SEPT 2019 | STATUS 65% | SHEET R6 of R15

File:J:\JobsData\10133.00 Image Reflection Area Reconstruction\00 CADD\01 Working Set\01 Civil\Phase 2\10133.00 Plan & Profile -Side Streets - Phase 2.dwg

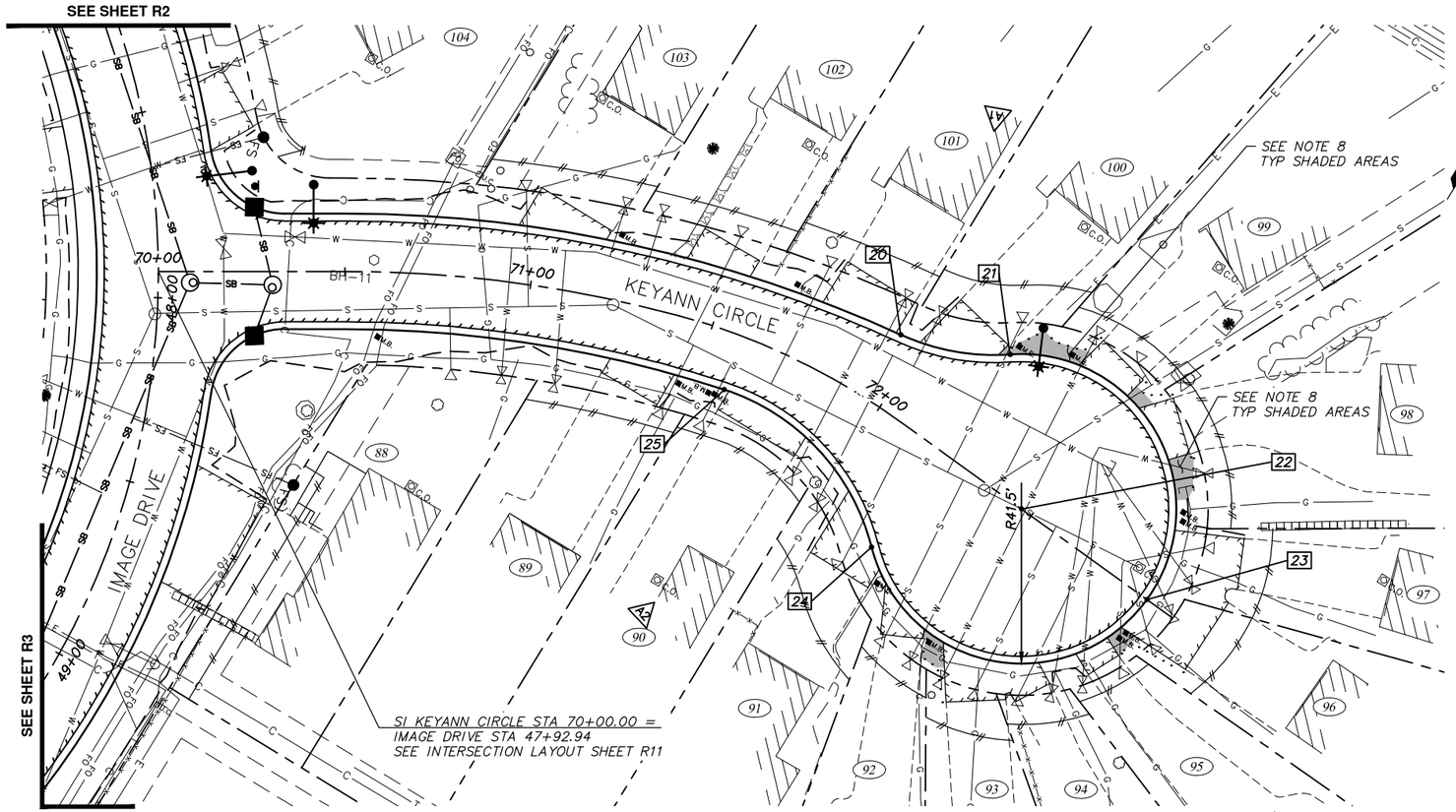

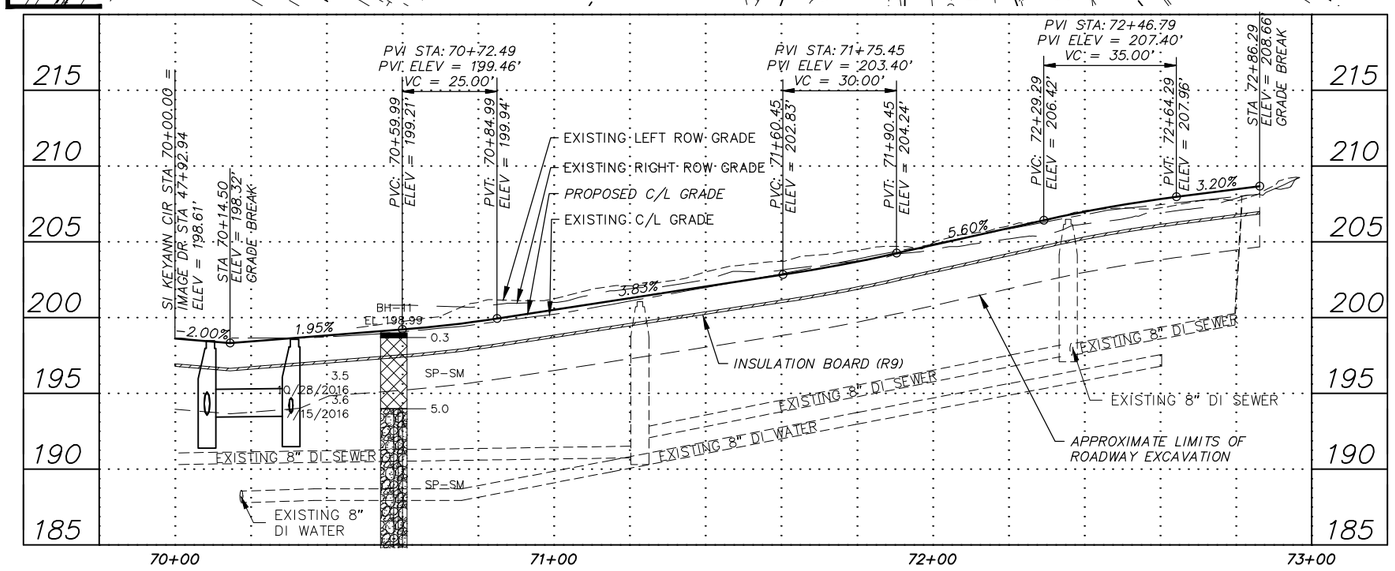

NOTES:

1. *SEE ROADWAY SUMMARY TABLE (T) SHEETS FOR DETAILED ROADWAY INFORMATION.*
2. *SEE DETAIL (D) SHEETS FOR ROADWAY DETAILS.*
3. *FOR DETAILED SOILS INFORMATION, SEE THE SPECIFICATIONS.*
4. *SEE STORM DRAIN (SD) SHEETS FOR LOCATIONS AND ELEVATIONS OF STORM DRAIN PIPES & STRUCTURES.*
5. *SEE SURVEY CONTROL (V) SHEETS FOR PROJECT CENTERLINE ALIGNMENT DATA.*
6. *SEE ILLUMINATION (I) SHEETS FOR ROADWAY LIGHTING INFORMATION.*
7. *THE DEMOLITION ITEMS REMOVED AS SHOWN ON THE DEMOLITION (B) SHEETS ARE NOT SHOWN FOR CLARITY.*
8. *GRADE AREA TO DRAIN TOWARDS ROADWAY PER DETAIL 2, SHEET C3. NOTIFY ENGINEER IMMEDIATELY IF MIN 1.5% POSITIVE GRADE TOWARD ROADWAY CANNOT BE MAINTAINED. THIS WORK SHALL BE INCIDENTAL TO CONTRACT AND NO SEPARATE PAYMENT SHALL BE MADE.*

☐ POINT SUMMARY – KEYANN CIRCLE

POINT	STATION	OFFSET (FT)	TBC ELEV (FT)	CURB TYPE	LIP OF CURB ELEV (FT)	DESCRIPTION
20						
21						
22						
23						
24						
25						

TO BE COMPLETED FOR 95%

△ CURB RADIUS TABLE

POINT	TBC RADIUS POINT		RADIUS (FT)	DESCRIPTION
	STATION	OFFSET (FT)		
A1				KEYANN CIRCLE
A2				KEYANN CIRCLE

TO BE COMPLETED FOR 95%

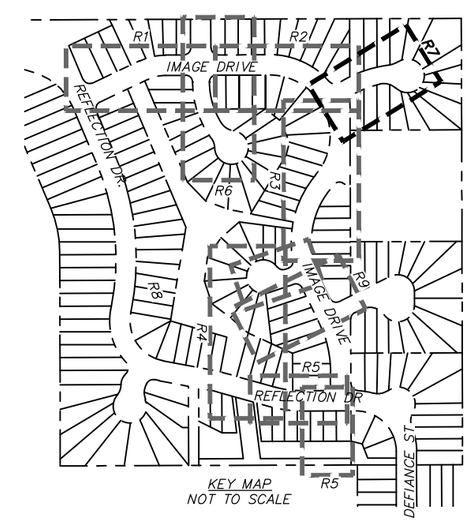

RECORD DRAWING

1. DATA PROVIDED BY: _____ TITLE: _____
   THIS WILL SERVE TO CERTIFY THAT THESE RECORD DRAWINGS ARE A TRUE AND ACCURATE REPRESENTATION OF THE PROJECT AS CONSTRUCTED.
   CONTRACTOR: _____
   BY: _____ TITLE: _____ DATE: _____
2. DATA TRANSFERRED BY: _____ TITLE: _____
   COMPANY: _____ DATE: _____
3. BASED ON PERIODIC FIELD OBSERVATIONS BY THE ENGINEER (OR AN INDIVIDUAL UNDER HIS/HER DIRECT SUPERVISION), THE CONTRACTOR-PROVIDED DATA APPEARS TO REPRESENT THE PROJECT AS CONSTRUCTED.
   DATA TRANSFER CHECKED BY: _____ TITLE: _____
   COMPANY: _____ DATE: _____
   BY: _____

DATA	DRAWN BY	CHECKED BY
BASE	TS	MJ
TOPOGRAPHY	TS	MJ
PROFILE	RB	JK
STORM SEWER	JH	JK
WATER/SANITARY SEWER	MV	JK
GAS	MV	JK
TELEPHONE	MV	JK
ELECTRIC	TK	BM
DESIGN	RB	JK
QUANTITIES	RB	JK
PRELIMINARY/FINAL	RB	JK
MUNICIPAL/STATE	RB	JK

PLAN CHECK

GRAPHIC 40 20 0 20 40 SCALE

FIELD BOOKS	BM NO.	LOCATION	ELEV.
DESIGN CRW Books 147, 148, & 151	GAAB 66	See page D-24 of the MOA Benchmark Book	238.10
	GAAB 96	See page D-26 of the MOA Benchmark Book	313.83
STAKING			
ASBUILT			
CONTRACTOR	BASIS OF THIS DATUM GAAB 1972 ADJUST		
INSPECTOR			

CONSTRUCTION RECORD — VERTICAL DATUM

REV	DATE	DESCRIPTION	BY

REVISIONS

CRW ENGINEERING GROUP, LLC
3940 ARCTIC BLVD. SUITE 300
ANCHORAGE, ALASKA 99503
PHONE: (907) 562-3252
#AECL882-AK

CONSULTANT

STATE OF ALASKA 49TH
Robert W. Burdick
CE-123959
REGISTERED PROFESSIONAL ENGINEER

SEAL

MUNICIPALITY OF ANCHORAGE

PROJECT MANAGEMENT AND ENGINEERING DEPARTMENT

14-50 IMAGE DRIVE / REFLECTION DRIVE AREA ROAD RECONSTRUCTION – PHASE 2 SCHED A

ROADWAY PLAN AND PROFILE

KEYANN CIRCLE

SCALE HOR. 1"=20' VER. 1"=5' | GRID SW1638, SW1738 | DATE SEPT 2019 | STATUS 65% | SHEET R7 of R15

File:J:\JobData\10133.00 Image Reflection Area Reconstruction\00 CADD\01 Working Set\01 Civil\Phase 2\10133.00 Plan & Profile -Side Streets - Phase 2.dwg

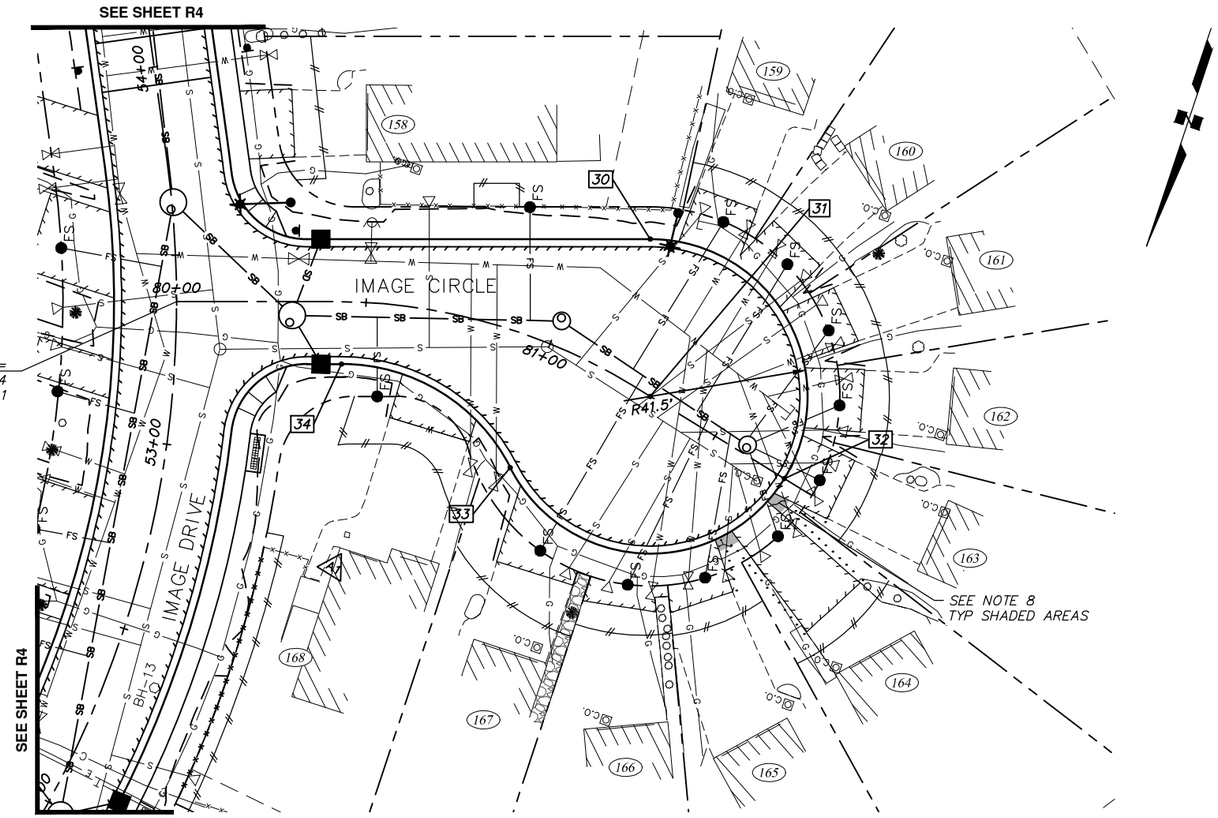

SI IMAGE CIRCLE STA 80+00.00 =
IMAGE DRIVE STA 53+37.74
SEE INTERSECTION LAYOUT SHEET R11

NOTES:

1. SEE ROADWAY SUMMARY TABLE (T) SHEETS FOR DETAILED ROADWAY INFORMATION.
2. SEE DETAIL (D) SHEETS FOR ROADWAY DETAILS.
3. FOR DETAILED SOILS INFORMATION, SEE THE SPECIFICATIONS.
4. SEE STORM DRAIN (SD) SHEETS FOR LOCATIONS AND ELEVATIONS OF STORM DRAIN PIPES & STRUCTURES.
5. SEE SURVEY CONTROL (V) SHEETS FOR PROJECT CENTERLINE ALIGNMENT DATA.
6. SEE ILLUMINATION (I) SHEETS FOR ROADWAY LIGHTING INFORMATION.
7. THE DEMOLITION ITEMS REMOVED AS SHOWN ON THE DEMOLITION (B) SHEETS ARE NOT SHOWN FOR CLARITY.
8. GRADE AREA TO DRAIN TOWARDS ROADWAY PER DETAIL 2, SHEET C3. NOTIFY ENGINEER IMMEDIATELY IF MIN 1.5% POSITIVE GRADE TOWARD ROADWAY CANNOT BE MAINTAINED. THIS WORK SHALL BE INCIDENTAL TO CONTRACT AND NO SEPARATE PAYMENT SHALL BE MADE.

☐ POINT SUMMARY – IMAGE CIRCLE

POINT	STATION	OFFSET (FT)	TBC ELEV (FT)	CURB TYPE	LIP OF CURB ELEV (FT)	DESCRIPTION
30						
31						
32						
33						
34						

TO BE COMPLETED FOR 95%

△ CURB RADIUS TABLE

POINT	TBC RADIUS POINT		RADIUS (FT)	DESCRIPTION
	STATION	OFFSET (FT)		
A1				IMAGE CIRCLE

TO BE COMPLETED FOR 95%

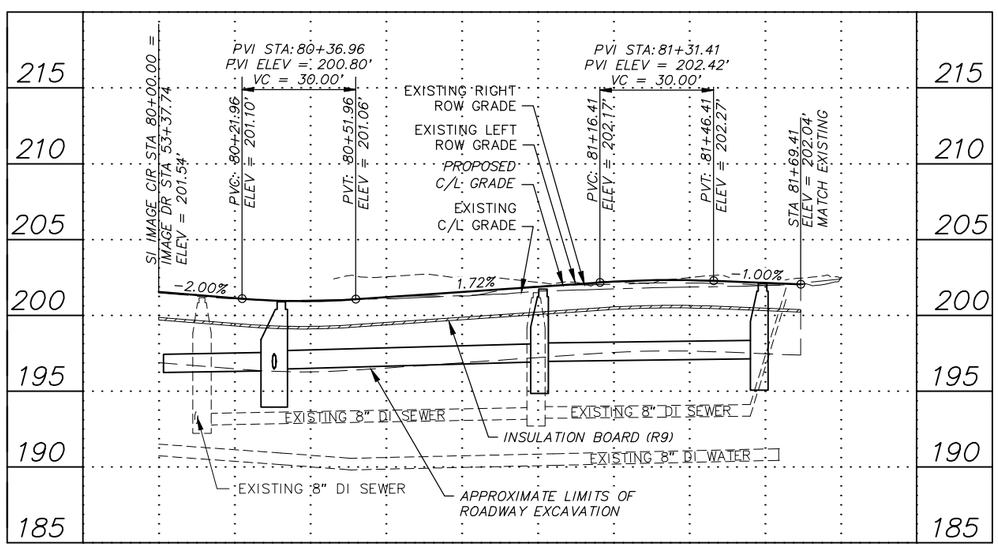

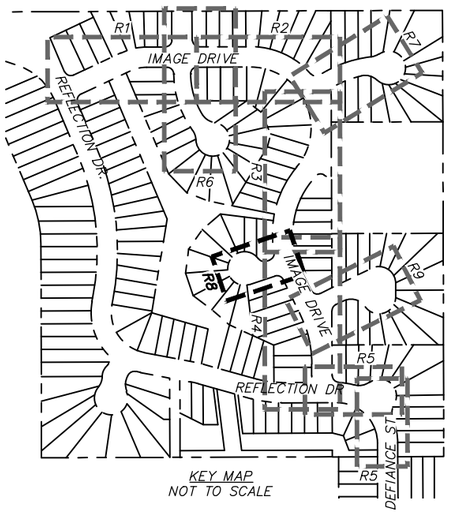

KEY MAP
NOT TO SCALE

RECORD DRAWING

1. DATA PROVIDED BY: _____ TITLE: _____
   THIS WILL SERVE TO CERTIFY THAT THESE RECORD DRAWINGS ARE A TRUE AND ACCURATE REPRESENTATION OF THE PROJECT AS CONSTRUCTED.
   CONTRACTOR: _____
   BY: _____ TITLE: _____ DATE: _____
2. DATA TRANSFERRED BY: _____ TITLE: _____
   COMPANY: _____ DATE: _____
3. BASED ON PERIODIC FIELD OBSERVATIONS BY THE ENGINEER (OR AN INDIVIDUAL UNDER HIS/HER DIRECT SUPERVISION), THE CONTRACTOR-PROVIDED DATA APPEARS TO REPRESENT THE PROJECT AS CONSTRUCTED.
   DATA TRANSFER CHECKED BY: _____ TITLE: _____
   COMPANY: _____ DATE: _____
   BY: _____

DATA	DRAWN BY	CHECKED BY
BASE	TS	MJ
TOPOGRAPHY	TS	MJ
PROFILE	RB	JK
STORM SEWER	JH	JK
WATER/SANITARY SEWER	MV	JK
GAS	MV	JK
TELEPHONE	MV	JK
ELECTRIC	TK	BM
DESIGN	RB	JK
QUANTITIES	RB	JK
PRELIMINARY/FINAL	RB	JK
MUNICIPAL/STATE	RB	JK

PLAN CHECK

GRAPHIC 40 20 0 20 40 SCALE

FIELD BOOKS	BM NO.	LOCATION	ELEV.
DESIGN CRW Books 147, 148, & 151	GAAB 66	See page D-24 of the MOA Benchmark Book	238.10
	GAAB 96	See page D-26 of the MOA Benchmark Book	313.83
STAKING			
ASBUILT			
CONTRACTOR			
INSPECTOR			

CONSTRUCTION RECORD

VERTICAL DATUM: BASIS OF THIS DATUM GAAB 1972 ADJUST

REV	DATE	DESCRIPTION	BY

REVISIONS

CRW ENGINEERING GROUP, LLC
3940 ARCTIC BLVD. SUITE 300
ANCHORAGE, ALASKA 99503
PHONE: (907) 562-3252
#AECL882-AK

CONSULTANT

STATE OF ALASKA 49TH
Robert W. Burdick
CE-123959
REGISTERED PROFESSIONAL ENGINEER

SEAL

MUNICIPALITY OF ANCHORAGE

PROJECT MANAGEMENT AND ENGINEERING DEPARTMENT

14-50 IMAGE DRIVE / REFLECTION DRIVE AREA ROAD RECONSTRUCTION – PHASE 2 SCHED A

ROADWAY PLAN AND PROFILE

IMAGE CIRCLE

SCALE HOR. 1"=20' VER. 1"=5' | GRID SW1638, SW1738 | DATE SEPT 2019 | STATUS 65% | SHEET R8 of R15

File: J:\JobsData\10133.00 Image Reflection Area Reconstruction\00 CADD\01 Working Set\01 Civil\Phase 2\10133.00 Plan & Profile -Side Streets - Phase 2.dwg

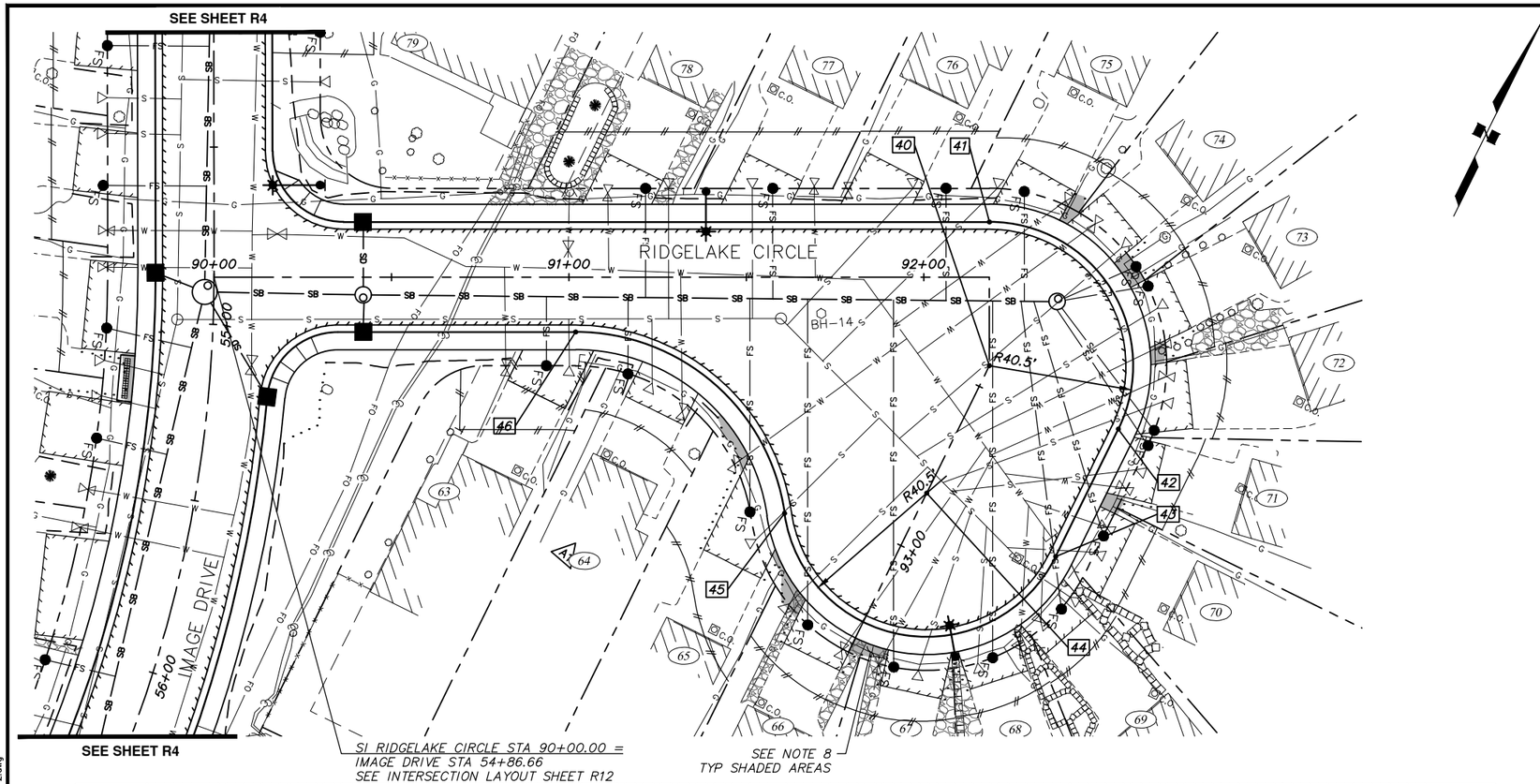

NOTES:

1. SEE ROADWAY SUMMARY TABLE (T) SHEETS FOR DETAILED ROADWAY INFORMATION.
2. SEE DETAIL (D) SHEETS FOR ROADWAY DETAILS.
3. FOR DETAILED SOILS INFORMATION, SEE THE SPECIFICATIONS.
4. SEE STORM DRAIN (SD) SHEETS FOR LOCATIONS AND ELEVATIONS OF STORM DRAIN PIPES & STRUCTURES.
5. SEE SURVEY CONTROL (V) SHEETS FOR PROJECT CENTERLINE ALIGNMENT DATA.
6. SEE ILLUMINATION (I) SHEETS FOR ROADWAY LIGHTING INFORMATION.
7. THE DEMOLITION ITEMS REMOVED AS SHOWN ON THE DEMOLITION (B) SHEETS ARE NOT SHOWN FOR CLARITY.
8. GRADE AREA TO DRAIN TOWARDS ROADWAY PER DETAIL 2, SHEET C3. NOTIFY ENGINEER IMMEDIATELY IF MIN 1.5% POSITIVE GRADE TOWARD ROADWAY CANNOT BE MAINTAINED. THIS WORK SHALL BE INCIDENTAL TO CONTRACT AND NO SEPARATE PAYMENT SHALL BE MADE.

☐ POINT SUMMARY – RIDGELAKE CIRCLE

POINT	STATION	OFFSET (FT)	TBC ELEV (FT)	CURB TYPE	LIP OF CURB ELEV (FT)	DESCRIPTION
40						
41						
42						
43						
44						
45						
46						

TO BE COMPLETED FOR 95%

△ CURB RADIUS TABLE

POINT	TBC RADIUS POINT		RADIUS (FT)	DESCRIPTION
	STATION	OFFSET (FT)		
A1				RIDGELAKE CIRCLE

TO BE COMPLETED FOR 95%

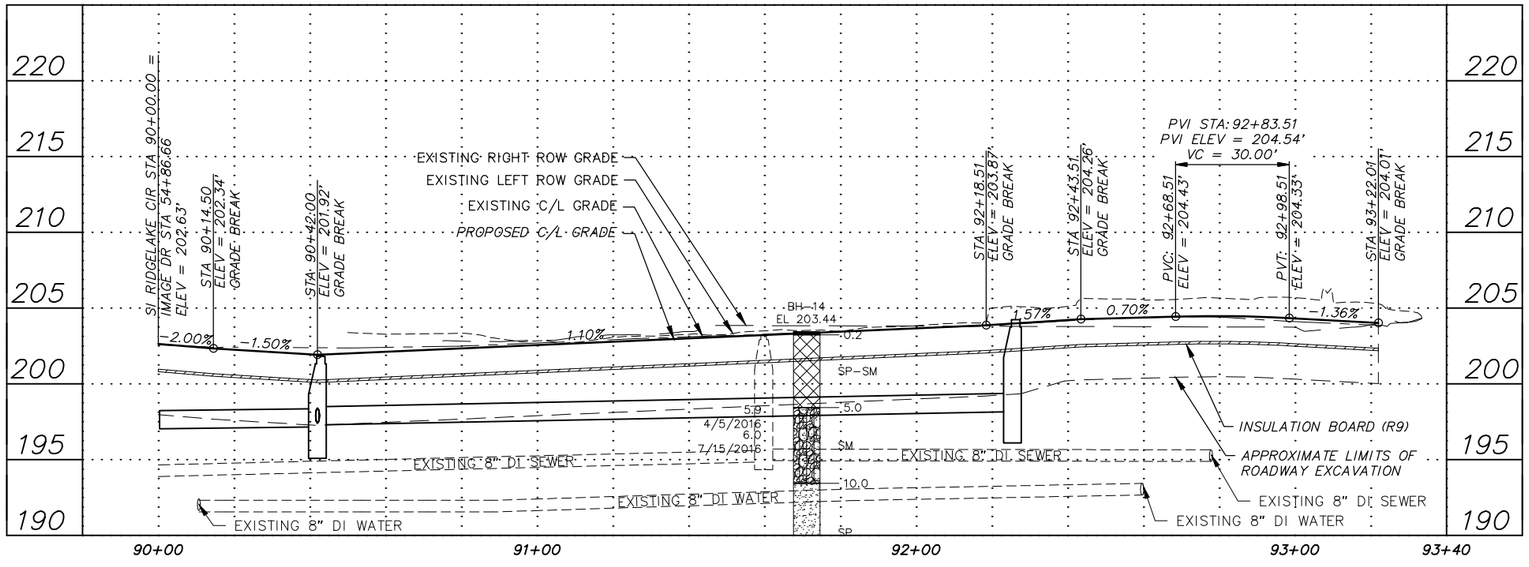

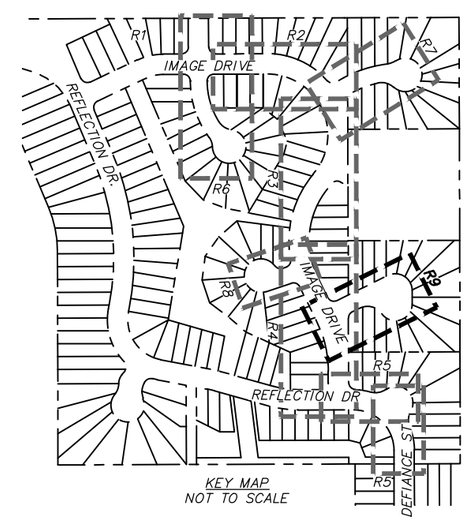

KEY MAP
NOT TO SCALE

RECORD DRAWING

1. DATA PROVIDED BY: _____ TITLE: _____
   THIS WILL SERVE TO CERTIFY THAT THESE RECORD DRAWINGS ARE A TRUE AND ACCURATE REPRESENTATION OF THE PROJECT AS CONSTRUCTED.
   CONTRACTOR: _____
   BY: _____ TITLE: _____ DATE: _____
2. DATA TRANSFERRED BY: _____ TITLE: _____
   COMPANY: _____ DATE: _____
3. BASED ON PERIODIC FIELD OBSERVATIONS BY THE ENGINEER (OR AN INDIVIDUAL UNDER HIS/HER DIRECT SUPERVISION), THE CONTRACTOR-PROVIDED DATA APPEARS TO REPRESENT THE PROJECT AS CONSTRUCTED.
   DATA TRANSFER CHECKED BY: _____ TITLE: _____
   COMPANY: _____ DATE: _____
   BY: _____

DATA	DRAWN BY	CHECKED BY
BASE	TS	MJ
TOPOGRAPHY	TS	MJ
PROFILE	RB	JK
STORM SEWER	JH	JK
WATER/SANITARY SEWER	MV	JK
GAS	MV	JK
TELEPHONE	MV	JK
ELECTRIC	TK	BM
DESIGN	RB	JK
QUANTITIES	RB	JK
PRELIMINARY/FINAL	RB	JK
MUNICIPAL/STATE	RB	JK

PLAN CHECK

GRAPHIC 40 20 0 20 40 SCALE

FIELD BOOKS
DESIGN CRW Books 147, 148, & 151
STAKING
ASBUILT
CONTRACTOR
INSPECTOR

CONSTRUCTION RECORD

BM NO.	LOCATION	ELEV.
GAAB 66	See page D-24 of the MOA Benchmark Book	238.10
GAAB 96	See page D-26 of the MOA Benchmark Book	313.83

BASIS OF THIS DATUM GAAB 1972 ADJUST

VERTICAL DATUM

REV	DATE	DESCRIPTION	BY

REVISIONS

CRW ENGINEERING GROUP, LLC
3940 ARCTIC BLVD. SUITE 300
ANCHORAGE, ALASKA 99503
PHONE: (907) 562-3252
#AECL582-AK

CONSULTANT

STATE OF ALASKA 49TH Robert W. Burdick CE-123959 REGISTERED PROFESSIONAL ENGINEER

SEAL

MUNICIPALITY OF ANCHORAGE

PROJECT MANAGEMENT AND ENGINEERING DEPARTMENT

14-50 IMAGE DRIVE / REFLECTION DRIVE AREA ROAD RECONSTRUCTION – PHASE 2 SCHED A

ROADWAY PLAN AND PROFILE

RIDGELAKE CIRCLE

SCALE HOR. 1"=20' VER. 1"=5'

GRID SW1638, SW1738

DATE SEPT 2019 STATUS 65%

SHEET R9 of R15

File:J:\JobsData\10133.00 Image Reflection Area Reconstruction\00 CADD\01 Working Set\01 Civil\Phase 2\10133.00 Plan & Profile -Side Streets - Phase 2.dwg

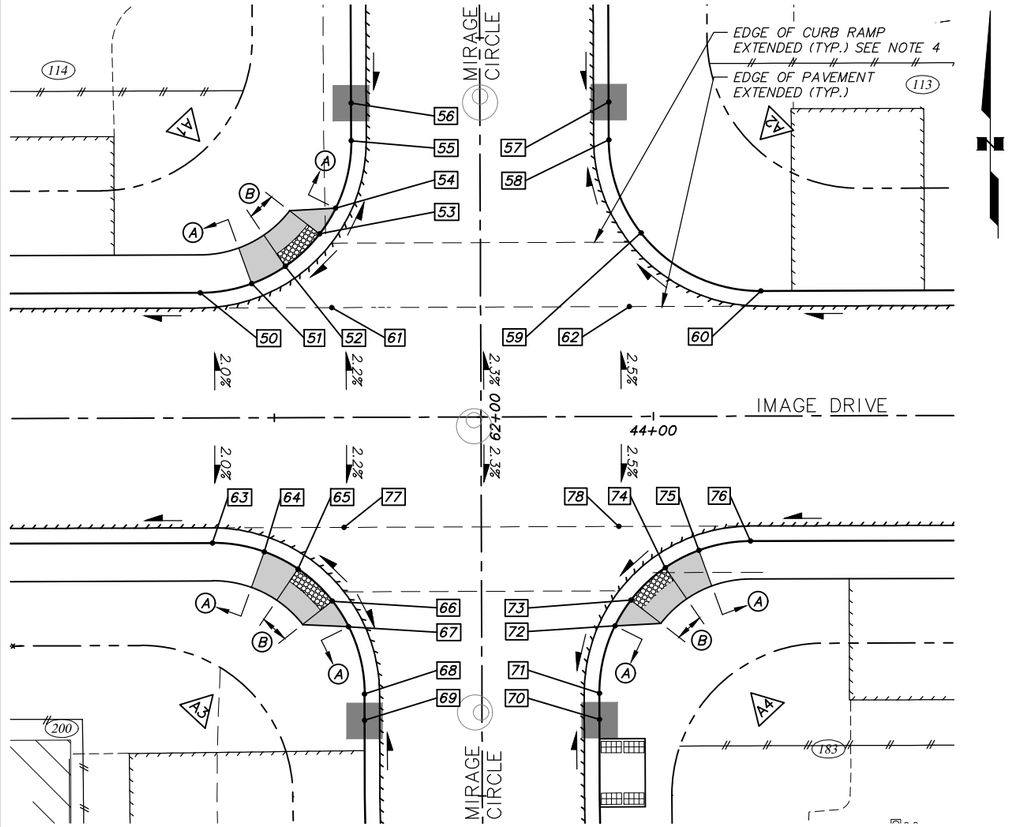

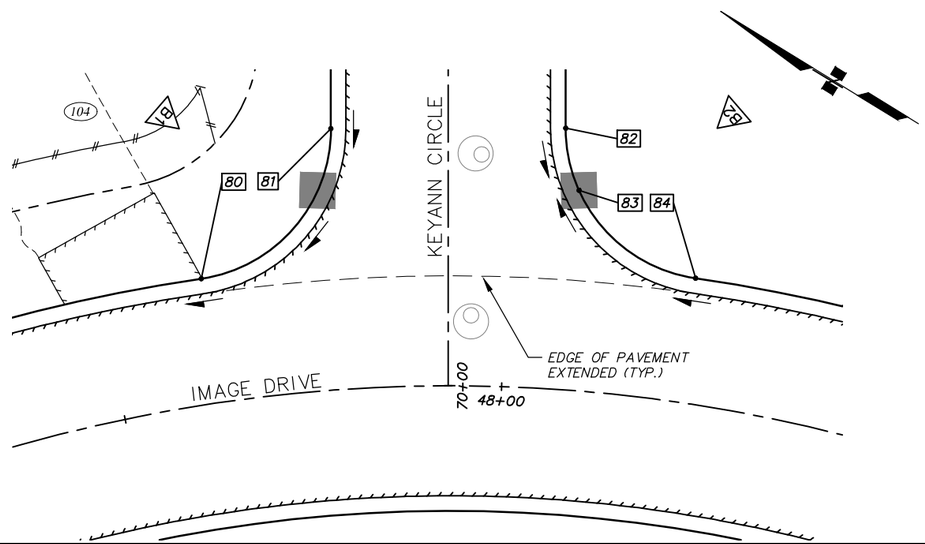

☐ POINT SUMMARY – REFLECTION DRIVE AT MIRAGE CIRCLE

POINT	STATION	OFFSET (FT)	TBC ELEV (FT)	CURB TYPE	LIP OF CURB ELEV (FT)	TOP AC ELEV (FT)	TO NEXT POINT* LENGTH (FT)	TO NEXT POINT* SLOPE (%)	DESCRIPTION
50									
51									
52									
53									
54									
55									
56									
57									
58									
59									
60									
61									
62									
63									
64									
65									
66									
67									
68									
69									
70									
71									
72									
73									
74									
75									
76									
77									
78									

TO BE COMPLETED FOR 95%

* LENGTH & SLOPE TO NEXT POINT IS ALONG LIP OF CURB

☐ POINT SUMMARY – IMAGE DRIVE AT KEYANN CIRCLE

POINT	STATION	OFFSET (FT)	TBC ELEV (FT)	CURB TYPE	LIP OF CURB ELEV (FT)	TOP AC ELEV (FT)	TO NEXT POINT* LENGTH (FT)	TO NEXT POINT* SLOPE (%)	DESCRIPTION
80									
81									
82									
83									
84									

TO BE COMPLETED FOR 95%

* LENGTH & SLOPE TO NEXT POINT IS ALONG LIP OF CURB

△ CURB RADIUS TABLE

POINT	TBC RADIUS POINT STATION	TBC RADIUS POINT OFFSET (FT)	RADIUS (FT)	DESCRIPTION
A1				MIRAGE CIRCLE
A2				MIRAGE CIRCLE
A3				MIRAGE CIRCLE
A4				MIRAGE CIRCLE
B1				KEYANN CIRCLE
B2				KEYANN CIRCLE

TO BE COMPLETED FOR 95%

NOTES

1. *SEE ROADWAY (R) SHEETS FOR ROADWAY & SIDEWALK LOCATIONS.*
2. *SEE STORM DRAIN (SD) SHEETS FOR LOCATIONS & ELEVATIONS OF SD PIPES & STRUCTURES.*
3. *SEE SIGNING & STRIPING (S) SHEETS FOR LOCATIONS & TYPES OF SIGNS & TRAFFIC MARKINGS.*
4. *THE MAXIMUM CROSS–SLOPE BETWEEN EDGE OF PAVEMENT EXTENDED AND EDGE OF CURB RAMP EXTENDED SHALL BE 2%. IF A 2% CROSS–SLOPE CANNOT BE MAINTAINED NOTIFY ENGINEER PRIOR TO INSTALLATION OF AC PAVEMENT.*
5. *PROVIDE CONSTANT FLOWLINE BETWEEN CHANGE IN CURB TYPE.*
6. *SEE DETAIL (D) SHEETS FOR CURB RAMP DETAILS.*
7. *LIP OF CURB IS FRONT OF CURB AND GUTTER AT EDGE OF PAVEMENT.*

LEGEND

- *APPROXIMATE DIRECTION OF DRAINAGE FLOWS*
- *DETECTABLE WARNING PANEL*
- *PCC CURB RAMP*

DESIGNATION	*CURB TYPE*
(A)	*TYPE 2 CURB*
(B)	*TYPE 2A CURB*

RECORD DRAWING

1. DATA PROVIDED BY: _____ TITLE: _____
   THIS WILL SERVE TO CERTIFY THAT THESE RECORD DRAWINGS ARE A TRUE AND ACCURATE REPRESENTATION OF THE PROJECT AS CONSTRUCTED.
   CONTRACTOR: _____
   BY: _____ TITLE: _____ DATE: _____
2. DATA TRANSFERRED BY: _____ TITLE: _____
   COMPANY: _____ DATE: _____
3. BASED ON PERIODIC FIELD OBSERVATIONS BY THE ENGINEER (OR AN INDIVIDUAL UNDER HIS/HER DIRECT SUPERVISION), THE CONTRACTOR–PROVIDED DATA APPEARS TO REPRESENT THE PROJECT AS CONSTRUCTED.
   DATA TRANSFER CHECKED BY: _____ TITLE: _____
   COMPANY: _____ DATE: _____
   BY: _____

DATA	DRAWN BY	CHECKED BY
BASE	TS	MJ
TOPOGRAPHY	TS	MJ
PROFILE	RB	JK
STORM SEWER	JH	JK
WATER/SANITARY SEWER	MV	JK
GAS	MV	JK
TELEPHONE	MV	JK
ELECTRIC	TK	BM
DESIGN	RB	JK
QUANTITIES	RB	JK
PRELIMINARY/FINAL	RB	JK
MUNICIPAL/STATE	RB	JK

PLAN CHECK

GRAPHIC 20 10 0 10 20 SCALE

FIELD BOOKS	BM NO.	LOCATION	ELEV.
DESIGN CRW Books 147, 148, & 151	GAAB 66	See page D–24 of the MOA Benchmark Book	238.10
	GAAB 96	See page D–26 of the MOA Benchmark Book	313.83
STAKING			
ASBUILT			
CONTRACTOR	BASIS OF THIS DATUM GAAB 1972 ADJUST		
INSPECTOR			

CONSTRUCTION RECORD

VERTICAL DATUM

REV	DATE	DESCRIPTION	BY

REVISIONS

CRW ENGINEERING GROUP, LLC
3940 ARCTIC BLVD. SUITE 300
ANCHORAGE, ALASKA 99503
PHONE: (907) 562–3252
#AECL882–AK

CONSULTANT

SEAL

MUNICIPALITY OF ANCHORAGE

PROJECT MANAGEMENT AND ENGINEERING DEPARTMENT

14–50 IMAGE DRIVE / REFLECTION DRIVE AREA ROAD RECONSTRUCTION – PHASE 2 SCHED A

INTERSECTION LAYOUT

MIRAGE CIRCLE & KEYANN CIRCLE

SCALE HOR. 1"=10' VER. N/A | GRID SW1638, SW1738 | DATE SEPT 2019 | STATUS 65% | SHEET R10 of R15

File: J:\JobsData\10133.00 Image Reflection Area Reconstruction\00 CADD\01 Working Set\01 Civil\Phase 2\10133.00 Intersection Layout – Phase 2.dwg

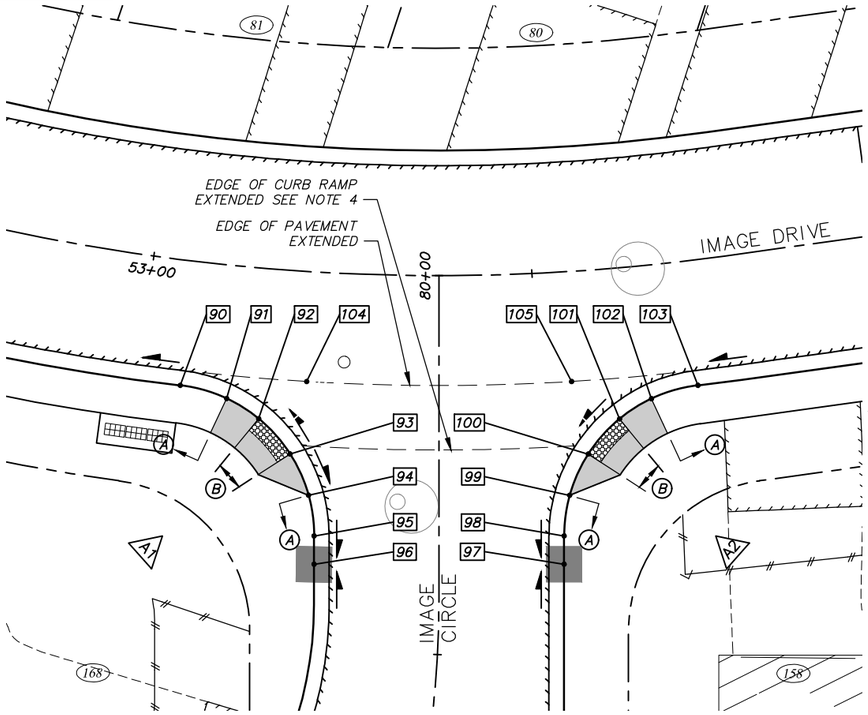

DESIGNATION	CURB TYPE
A	TYPE 2 CURB
B	TYPE 2A CURB

NOTES

1. SEE ROADWAY (R) SHEETS FOR ROADWAY & SIDEWALK LOCATIONS.
2. SEE STORM DRAIN (SD) SHEETS FOR LOCATIONS & ELEVATIONS OF SD PIPES & STRUCTURES.
3. SEE SIGNING & STRIPING (S) SHEETS FOR LOCATIONS & TYPES OF SIGNS & TRAFFIC MARKINGS.
4. THE MAXIMUM CROSS-SLOPE BETWEEN EDGE OF PAVEMENT EXTENDED AND EDGE OF CURB RAMP EXTENDED SHALL BE 2%. IF A 2% CROSS-SLOPE CANNOT BE MAINTAINED NOTIFY ENGINEER PRIOR TO INSTALLATION OF AC PAVEMENT.
5. PROVIDE CONSTANT FLOWLINE BETWEEN CHANGE IN CURB TYPE.
6. SEE DETAIL (D) SHEETS FOR CURB RAMP DETAILS.
7. LIP OF CURB IS FRONT OF CURB AND GUTTER AT EDGE OF PAVEMENT.

LEGEND

- APPROXIMATE DIRECTION OF DRAINAGE FLOWS
- DETECTABLE WARNING PANEL
- PCC CURB RAMP

△ CURB RADIUS TABLE

POINT	TBC RADIUS POINT		RADIUS (FT)	DESCRIPTION
	STATION	OFFSET (FT)		
A1				IMAGE CIRCLE
A2				IMAGE CIRCLE
B1				RIDGELAKE CIRCLE
B2				RIDGELAKE CIRCLE

TO BE COMPLETED FOR 95%

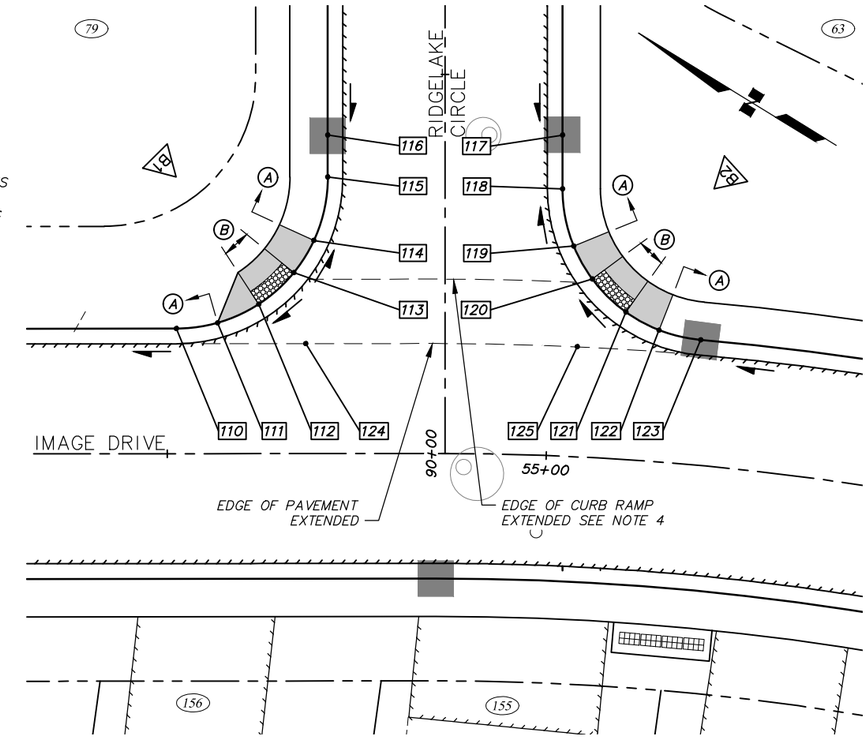

☐ POINT SUMMARY – IMAGE DRIVE AT IMAGE CIRCLE

POINT	STATION	OFFSET (FT)	TBC ELEV (FT)	CURB TYPE	LIP OF CURB ELEV (FT)	TOP AC ELEV (FT)	TO NEXT POINT*		DESCRIPTION
							LENGTH (FT)	SLOPE (%)	
90									
91									
92									
93									
94									
95									
96									
97									
98									
99									
100									
101									
102									
103									
104									
105									

TO BE COMPLETED FOR 95%

* LENGTH & SLOPE TO NEXT POINT IS ALONG LIP OF CURB

☐ POINT SUMMARY – IMAGE DRIVE AT RIDGELAKE CIRCLE

POINT	STATION	OFFSET (FT)	TBC ELEV (FT)	CURB TYPE	LIP OF CURB ELEV (FT)	TOP AC ELEV (FT)	TO NEXT POINT*		DESCRIPTION
							LENGTH (FT)	SLOPE (%)	
110									
111									
112									
113									
114									
115									
116									
117									
118									
119									
120									
121									
122									
123									
124									
125									

TO BE COMPLETED FOR 95%

* LENGTH & SLOPE TO NEXT POINT IS ALONG LIP OF CURB

RECORD DRAWING

1. DATA PROVIDED BY: _____ TITLE: _____
   THIS WILL SERVE TO CERTIFY THAT THESE RECORD DRAWINGS ARE A TRUE AND ACCURATE REPRESENTATION OF THE PROJECT AS CONSTRUCTED.
   CONTRACTOR: _____
   BY: _____ TITLE: _____ DATE: _____
2. DATA TRANSFERRED BY: _____ TITLE: _____
   COMPANY: _____ DATE: _____
3. BASED ON PERIODIC FIELD OBSERVATIONS BY THE ENGINEER (OR AN INDIVIDUAL UNDER HIS/HER DIRECT SUPERVISION), THE CONTRACTOR-PROVIDED DATA APPEARS TO REPRESENT THE PROJECT AS CONSTRUCTED.
   DATA TRANSFER CHECKED BY: _____ TITLE: _____
   COMPANY: _____ DATE: _____
   BY: _____

DATA	DRAWN BY	CHECKED BY
BASE	TS	MJ
TOPOGRAPHY	TS	MJ
PROFILE	RB	JK
STORM SEWER	JH	JK
WATER/SANITARY SEWER	MV	JK
GAS	MV	JK
TELEPHONE	MV	JK
ELECTRIC	TK	BM
DESIGN	RB	JK
QUANTITIES	RB	JK
PRELIMINARY/FINAL	RB	JK
MUNICIPAL/STATE	RB	JK

PLAN CHECK

GRAPHIC 20 10 0 10 20 SCALE

FIELD BOOKS	BM NO.	LOCATION	ELEV.
DESIGN CRW Books 147, 148, & 151	GAAB 66	See page D-24 of the MOA Benchmark Book	238.10
	GAAB 96	See page D-26 of the MOA Benchmark Book	313.83
STAKING			
ASBUILT			
CONTRACTOR	BASIS OF THIS DATUM GAAB 1972 ADJUST		
INSPECTOR			

CONSTRUCTION RECORD

VERTICAL DATUM

REV	DATE	DESCRIPTION	BY

REVISIONS

CRW ENGINEERING GROUP, LLC
3940 ARCTIC BLVD. SUITE 300
ANCHORAGE, ALASKA 99503
PHONE: (907) 562-3252
#AECL882-AK

CONSULTANT

SEAL

MUNICIPALITY OF ANCHORAGE

PROJECT MANAGEMENT AND ENGINEERING DEPARTMENT

14-50 IMAGE DRIVE / REFLECTION DRIVE AREA ROAD RECONSTRUCTION – PHASE 2 SCHED A

INTERSECTION LAYOUT

IMAGE CIRCLE & RIDGELAKE CIRCLE

SCALE HOR. 1"=10' VER. N/A | GRID SW1638, SW1738 | DATE SEPT 2019 | STATUS 65% | SHEET R11 of R15

File:J:\JobsData\10133.00 Image Reflection Area Reconstruction\00 CADD\01 Working Set\01 Civil\Phase 2\10133.00 Intersection Layout – Phase 2.dwg

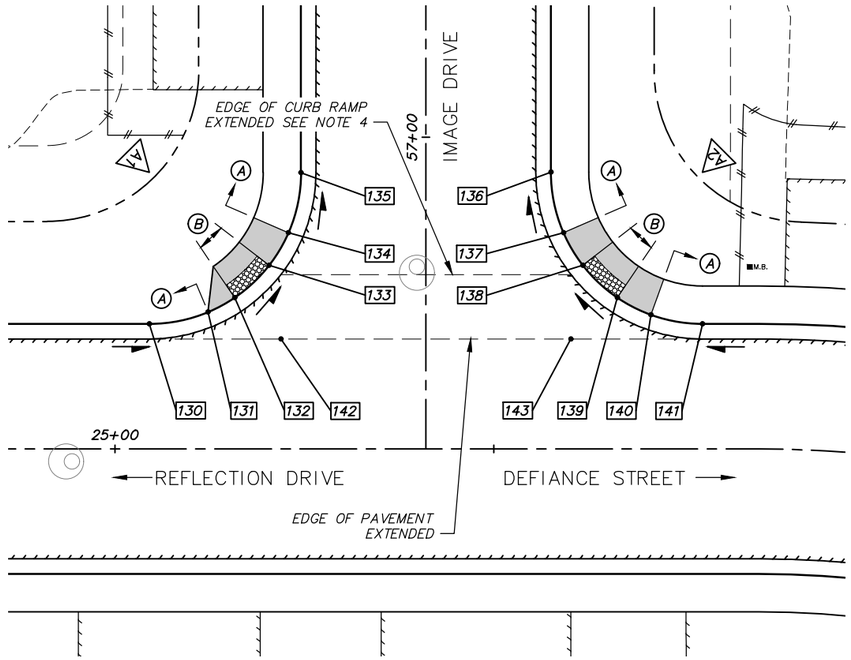

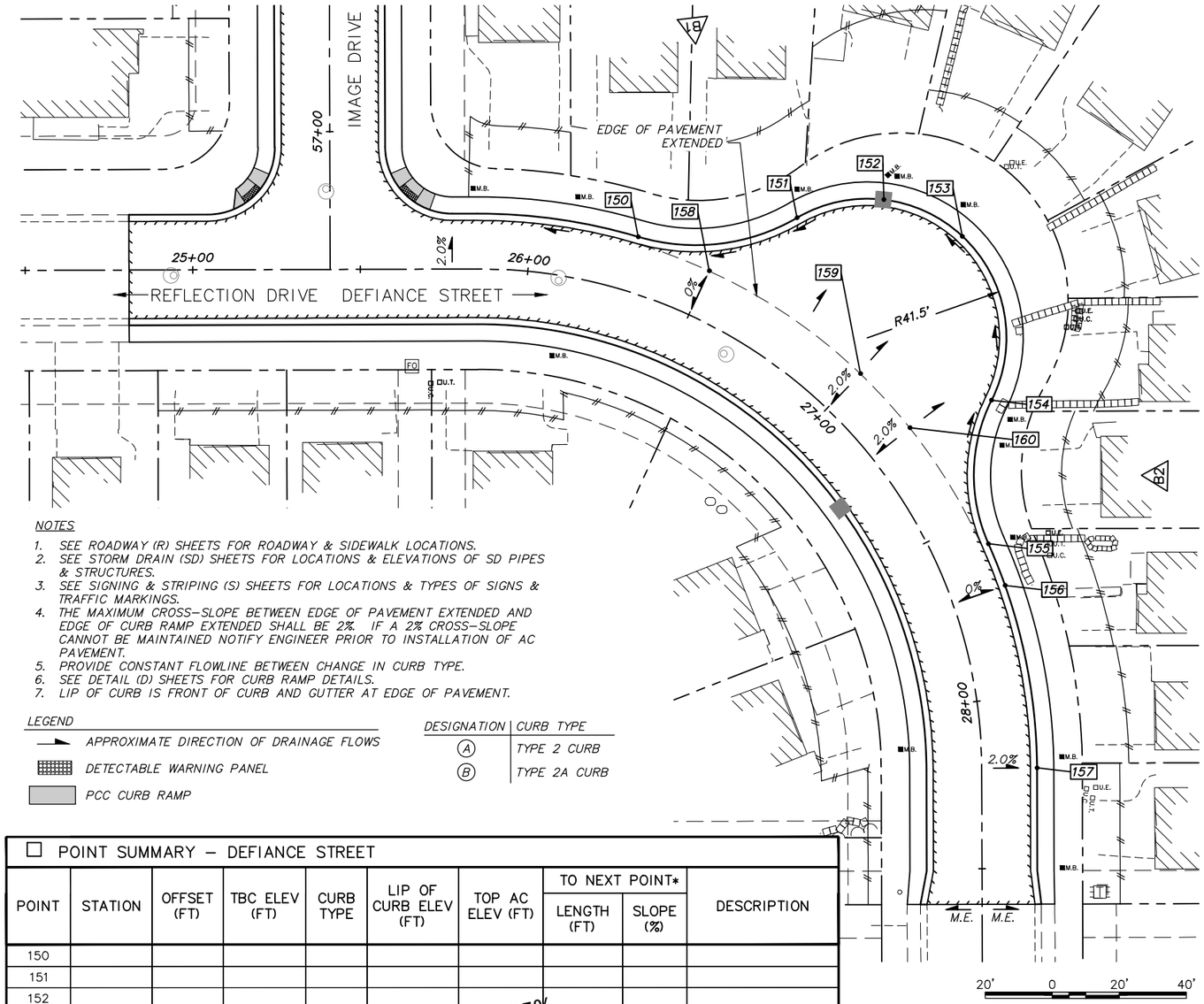

NOTES

1. SEE ROADWAY (R) SHEETS FOR ROADWAY & SIDEWALK LOCATIONS.
2. SEE STORM DRAIN (SD) SHEETS FOR LOCATIONS & ELEVATIONS OF SD PIPES & STRUCTURES.
3. SEE SIGNING & STRIPING (S) SHEETS FOR LOCATIONS & TYPES OF SIGNS & TRAFFIC MARKINGS.
4. THE MAXIMUM CROSS-SLOPE BETWEEN EDGE OF PAVEMENT EXTENDED AND EDGE OF CURB RAMP EXTENDED SHALL BE 2%. IF A 2% CROSS-SLOPE CANNOT BE MAINTAINED NOTIFY ENGINEER PRIOR TO INSTALLATION OF AC PAVEMENT.
5. PROVIDE CONSTANT FLOWLINE BETWEEN CHANGE IN CURB TYPE.
6. SEE DETAIL (D) SHEETS FOR CURB RAMP DETAILS.
7. LIP OF CURB IS FRONT OF CURB AND GUTTER AT EDGE OF PAVEMENT.

LEGEND

- APPROXIMATE DIRECTION OF DRAINAGE FLOWS
- DETECTABLE WARNING PANEL
- PCC CURB RAMP

DESIGNATION	CURB TYPE
A	TYPE 2 CURB
B	TYPE 2A CURB

△ CURB RADIUS TABLE

POINT	TBC RADIUS POINT		RADIUS (FT)	DESCRIPTION
	STATION	OFFSET (FT)		
A1				IMAGE DRIVE
A2				IMAGE DRIVE
B1				DEFIANCE STREET
B2				DEFIANCE STREET

TO BE COMPLETED FOR 95%

☐ POINT SUMMARY – REFLECTION DRIVE AT IMAGE DRIVE (SOUTH)

POINT	STATION	OFFSET (FT)	TBC ELEV (FT)	CURB TYPE	LIP OF CURB ELEV (FT)	TOP AC ELEV (FT)	TO NEXT POINT*		DESCRIPTION
							LENGTH (FT)	SLOPE (%)	
130									
131									
132									
133									
134									
135									
136									
137									
138									
139									
140									
141									
142									
143									

* LENGTH & SLOPE TO NEXT POINT IS ALONG LIP OF CURB

TO BE COMPLETED FOR 95%

☐ POINT SUMMARY – DEFIANCE STREET

POINT	STATION	OFFSET (FT)	TBC ELEV (FT)	CURB TYPE	LIP OF CURB ELEV (FT)	TOP AC ELEV (FT)	TO NEXT POINT*		DESCRIPTION
							LENGTH (FT)	SLOPE (%)	
150									
151									
152									
153									
154									
155									
156									
157									
158									
159									
160									

* LENGTH & SLOPE TO NEXT POINT IS ALONG LIP OF CURB

TO BE COMPLETED FOR 95%

RECORD DRAWING

1. DATA PROVIDED BY: _____ TITLE: _____
   THIS WILL SERVE TO CERTIFY THAT THESE RECORD DRAWINGS ARE A TRUE AND ACCURATE REPRESENTATION OF THE PROJECT AS CONSTRUCTED.
   CONTRACTOR: _____
   BY: _____ TITLE: _____ DATE: _____
2. DATA TRANSFERRED BY: _____ TITLE: _____
   COMPANY: _____ DATE: _____
3. BASED ON PERIODIC FIELD OBSERVATIONS BY THE ENGINEER (OR AN INDIVIDUAL UNDER HIS/HER DIRECT SUPERVISION), THE CONTRACTOR-PROVIDED DATA APPEARS TO REPRESENT THE PROJECT AS CONSTRUCTED.
   DATA TRANSFER CHECKED BY: _____ TITLE: _____
   COMPANY: _____ DATE: _____
   BY: _____

DATA	DRAWN BY	CHECKED BY
BASE	TS	MJ
TOPOGRAPHY	TS	MJ
PROFILE	RB	JK
STORM SEWER	JH	JK
WATER/SANITARY SEWER	MV	JK
GAS	MV	JK
TELEPHONE	MV	JK
ELECTRIC	TK	BM
DESIGN	RB	JK
QUANTITIES	RB	JK
PRELIMINARY/FINAL	RB	JK
MUNICIPAL/STATE	RB	JK

PLAN CHECK

FIELD BOOKS
DESIGN CRW Books 147, 148, & 151
STAKING
ASBUILT
CONTRACTOR
INSPECTOR

CONSTRUCTION RECORD

BM NO.	LOCATION	ELEV.
GAAB 66	See page D-24 of the MOA Benchmark Book	238.10
GAAB 96	See page D-26 of the MOA Benchmark Book	313.83

BASIS OF THIS DATUM GAAB 1972 ADJUST

VERTICAL DATUM

REV	DATE	DESCRIPTION	BY

REVISIONS

CRW ENGINEERING GROUP, LLC
3940 ARCTIC BLVD. SUITE 300
ANCHORAGE, ALASKA 99503
PHONE: (907) 562-3252
#AECL882-AK

CONSULTANT

STATE OF ALASKA 49 TH
Robert W. Burdick
CE-123959
REGISTERED PROFESSIONAL ENGINEER

SEAL

MUNICIPALITY OF ANCHORAGE

PROJECT MANAGEMENT AND ENGINEERING DEPARTMENT

14-50 IMAGE DRIVE / REFLECTION DRIVE AREA ROAD RECONSTRUCTION – PHASE 2 SCHED A

INTERSECTION & CURB LAYOUT

SCALE HOR. GRAPHIC VER. N/A | GRID SW1638, SW1738 | DATE SEPT 2019 | STATUS 65% | SHEET R12 of R15

File: J:\JobsData\10133.00 Image Reflection Area Reconstruction\00 CADD\01 Working Set\01 Civil\Phase 2\10133.00 Intersection Layout - Phase 2.dwg

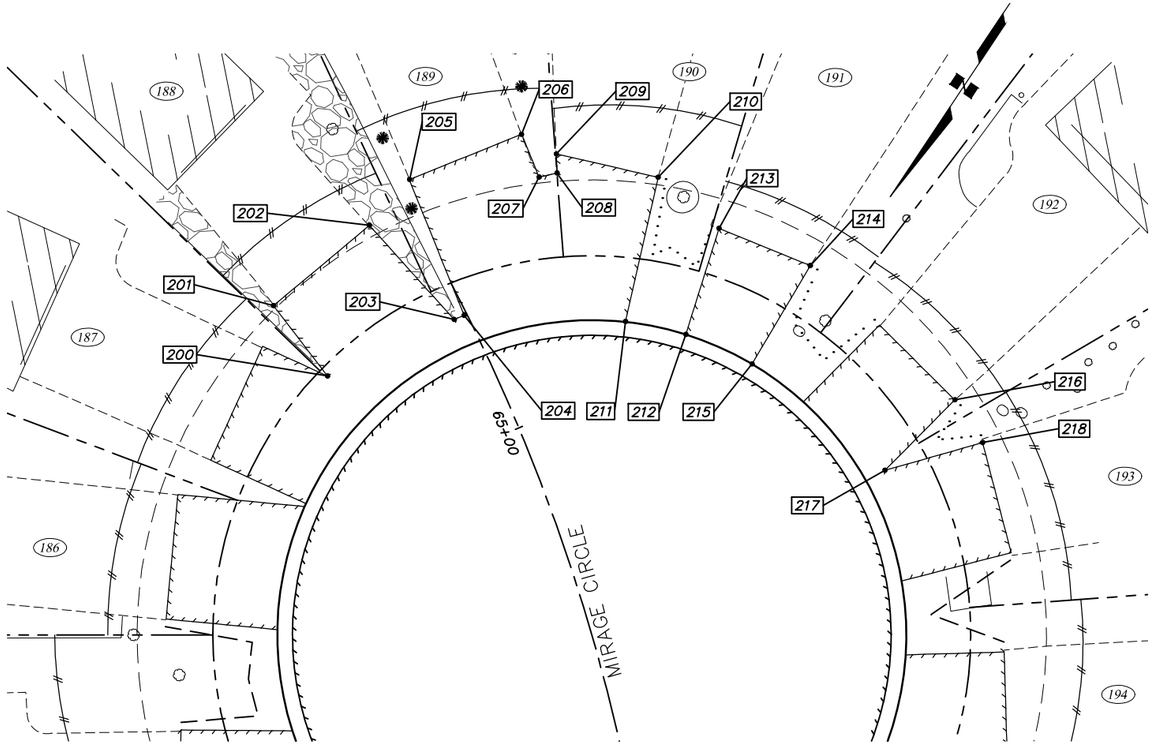

1 PARCEL 188-193 DRIVEWAY RECONSTRUCTION PLAN

SCALE: GRAPHIC

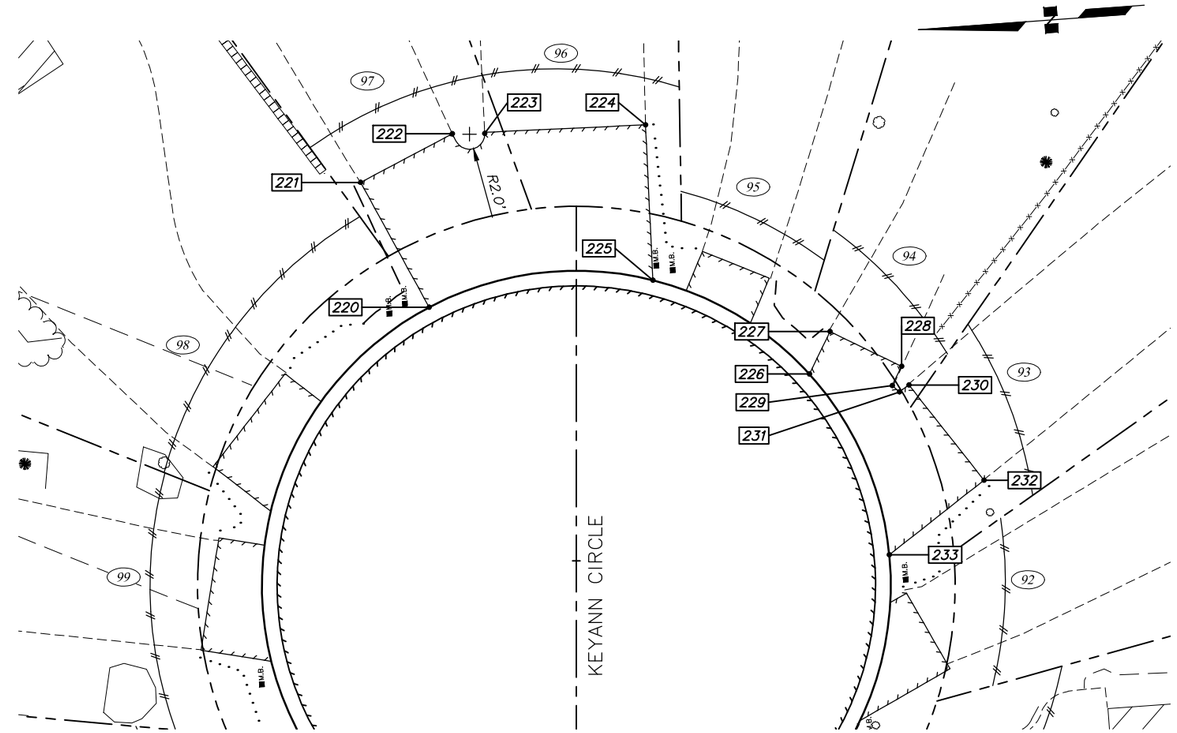

2 PARCEL 93-97 DRIVEWAY RECONSTRUCTION PLAN

SCALE: GRAPHIC

☐ POINT SUMMARY – PARCEL 188–193

POINT	STATION	OFFSET (FT)	ELEV (FT)	DESCRIPTION
200				
201				
202				
203				
204				
205				
206				
207				
208				
209				
210				
211				
212				
213				
214				
215				
216				
217				

TO BE COMPLETED FOR 95%

☐ POINT SUMMARY – PARCEL 93–96

POINT	STATION	OFFSET (FT)	ELEV (FT)	DESCRIPTION
220				
221				
222				
223				
224				
225				
226				
227				
228				
229				
230				
231				
232				
233				

TO BE COMPLETED FOR 95%

RECORD DRAWING

1. DATA PROVIDED BY: _____ TITLE: _____
   THIS WILL SERVE TO CERTIFY THAT THESE RECORD DRAWINGS ARE A TRUE AND ACCURATE REPRESENTATION OF THE PROJECT AS CONSTRUCTED.
   CONTRACTOR: _____
   BY: _____ TITLE: _____ DATE: _____
2. DATA TRANSFERRED BY: _____ TITLE: _____
   COMPANY: _____ DATE: _____
3. BASED ON PERIODIC FIELD OBSERVATIONS BY THE ENGINEER (OR AN INDIVIDUAL UNDER HIS/HER DIRECT SUPERVISION), THE CONTRACTOR–PROVIDED DATA APPEARS TO REPRESENT THE PROJECT AS CONSTRUCTED.
   DATA TRANSFER CHECKED BY: _____ TITLE: _____
   COMPANY: _____ DATE: _____
   BY: _____

DATA	DRAWN BY	CHECKED BY
BASE	TS	MJ
TOPOGRAPHY	TS	MJ
PROFILE	RB	JK
STORM SEWER	JH	JK
WATER/SANITARY SEWER	MV	JK
GAS	MV	JK
TELEPHONE	MV	JK
ELECTRIC	TK	BM
DESIGN	RB	JK
QUANTITIES	RB	JK
PRELIMINARY/FINAL	RB	JK
MUNICIPAL/STATE	RB	JK

PLAN CHECK

GRAPHIC 20 10 0 10 20 SCALE

FIELD BOOKS	BM NO.	LOCATION	ELEV.
DESIGN CRW Books 147, 148, & 151	GAAB 66	See page D–24 of the MOA Benchmark Book	238.10
	GAAB 96	See page D–26 of the MOA Benchmark Book	313.83
STAKING			
ASBUILT			
CONTRACTOR	BASIS OF THIS DATUM GAAB 1972 ADJUST		
INSPECTOR			

CONSTRUCTION RECORD

VERTICAL DATUM

REV	DATE	DESCRIPTION	BY

REVISIONS

CRW ENGINEERING GROUP, LLC
3940 ARCTIC BLVD. SUITE 300
ANCHORAGE, ALASKA 99503
PHONE: (907) 562–3252
#AECL882–AK

CONSULTANT

STATE OF ALASKA 49TH Robert W. Burdick CE-123959 REGISTERED PROFESSIONAL ENGINEER

SEAL

MUNICIPALITY OF ANCHORAGE

PROJECT MANAGEMENT AND ENGINEERING DEPARTMENT

14–50 IMAGE DRIVE / REFLECTION DRIVE AREA ROAD RECONSTRUCTION – PHASE 2 SCHED A

DRIVEWAY RECONSTRUCTION PLANS

SCALE HOR. 1"=10' VER. N/A | GRID SW1638, SW1738 | DATE SEPT 2019 | STATUS 65% | SHEET R13 of R15

File: J:\JobsData\10133.00 Image Reflection Area Reconstruction\00 CADD\01 Working Set\01 Civil\Phase 2\10133.00 Driveway Reconstruction – Phase 2.dwg

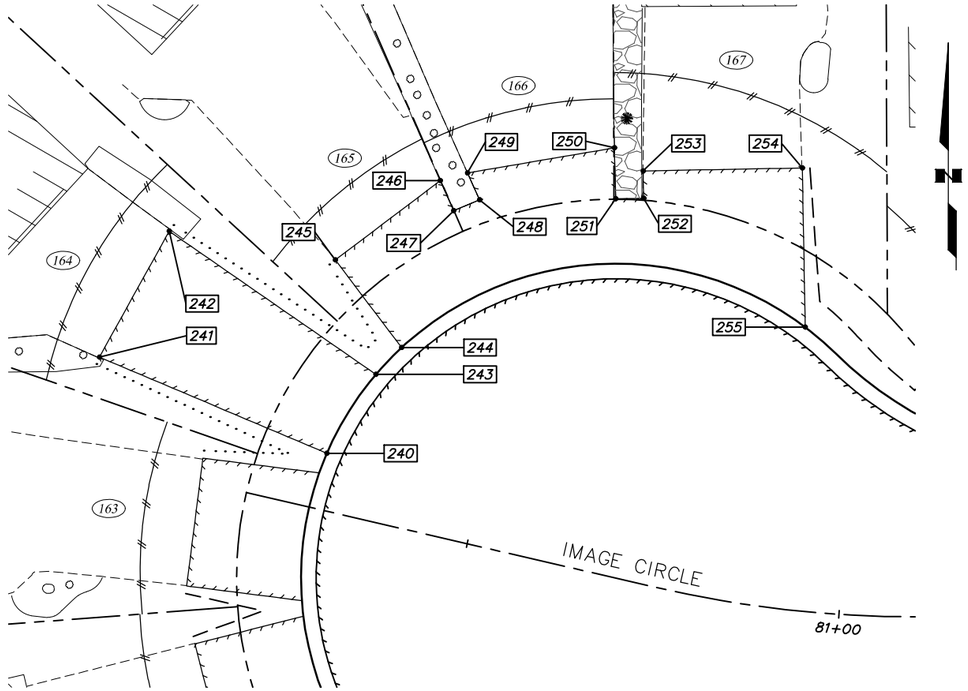

1 **PARCEL 164-167 DRIVEWAY RECONSTRUCTION PLAN**

SCALE: GRAPHIC

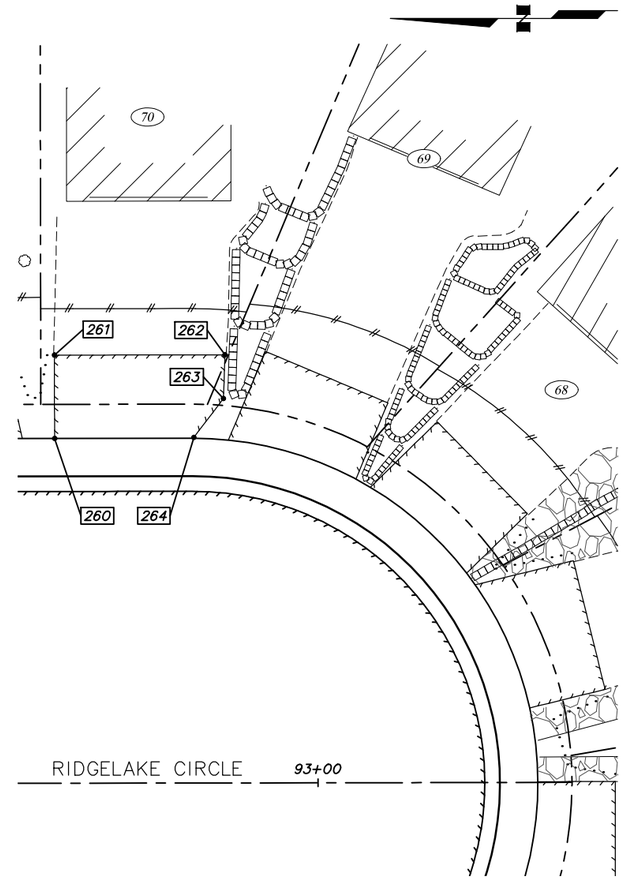

2 **PARCEL 68-70 DRIVEWAY RECONSTRUCTION PLAN**

SCALE: GRAPHIC

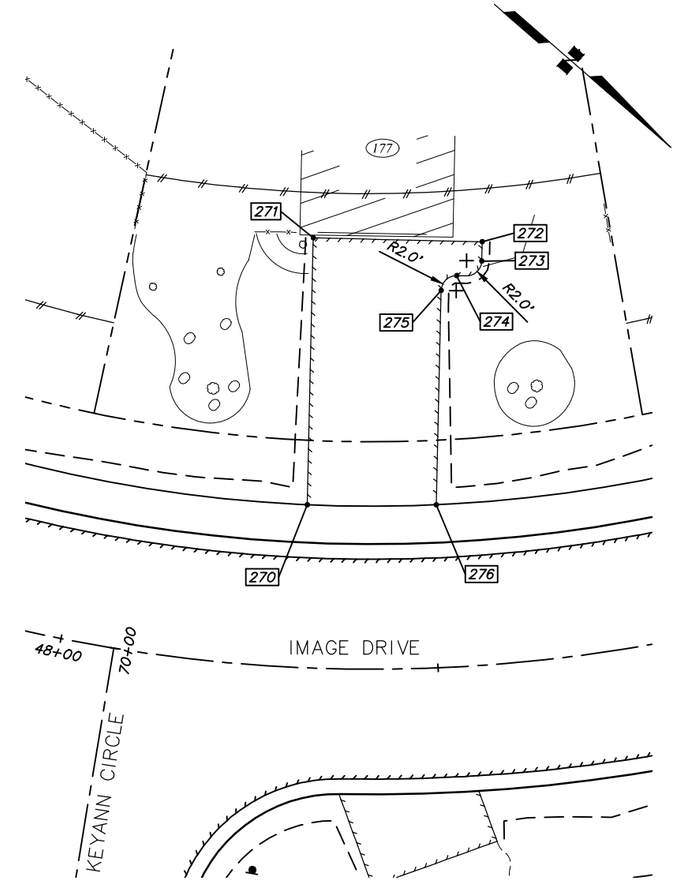

3 **PARCEL 177 DRIVEWAY RECONSTRUCTION PLAN**

SCALE: GRAPHIC

☐ POINT SUMMARY – PARCEL 164–167

POINT	STATION	OFFSET (FT)	ELEV (FT)	DESCRIPTION
240				
241				
242				
243				
244				
245				
246				
247				
248				
249				
250				
251				
252				
253				
254				
255				

TO BE COMPLETED FOR 95%

☐ POINT SUMMARY – PARCEL 68–70

POINT	STATION	OFFSET (FT)	ELEV (FT)	DESCRIPTION
260				
261				
262				
263				
264				

TO BE COMPLETED FOR 95%

☐ POINT SUMMARY – PARCEL 177

POINT	STATION	OFFSET (FT)	ELEV (FT)	DESCRIPTION
270				
271				
272				
273				
274				
275				
276				

TO BE COMPLETED FOR 95%

RECORD DRAWING

1. DATA PROVIDED BY: _____ TITLE: _____
   THIS WILL SERVE TO CERTIFY THAT THESE RECORD DRAWINGS ARE A TRUE AND ACCURATE REPRESENTATION OF THE PROJECT AS CONSTRUCTED.
   CONTRACTOR: _____
   BY: _____ TITLE: _____ DATE: _____
2. DATA TRANSFERRED BY: _____ TITLE: _____
   COMPANY: _____ DATE: _____
3. BASED ON PERIODIC FIELD OBSERVATIONS BY THE ENGINEER (OR AN INDIVIDUAL UNDER HIS/HER DIRECT SUPERVISION), THE CONTRACTOR–PROVIDED DATA APPEARS TO REPRESENT THE PROJECT AS CONSTRUCTED.
   DATA TRANSFER CHECKED BY: _____ TITLE: _____
   COMPANY: _____ DATE: _____
   BY: _____

DATA	DRAWN BY	CHECKED BY
BASE	TS	MJ
TOPOGRAPHY	TS	MJ
PROFILE	RB	JK
STORM SEWER	JH	JK
WATER/SANITARY SEWER	MV	JK
GAS	MV	JK
TELEPHONE	MV	JK
ELECTRIC	TK	BM
DESIGN	RB	JK
QUANTITIES	RB	JK
PRELIMINARY/FINAL	RB	JK
MUNICIPAL/STATE	RB	JK

PLAN CHECK

GRAPHIC 20 10 0 10 20 SCALE

FIELD BOOKS	BM NO.	LOCATION	ELEV.
DESIGN CRW Books 147, 148, & 151	GAAB 66	See page D–24 of the MOA Benchmark Book	238.10
	GAAB 96	See page D–26 of the MOA Benchmark Book	313.83
STAKING			
ASBUILT			
CONTRACTOR	BASIS OF THIS DATUM GAAB 1972 ADJUST		
INSPECTOR			

CONSTRUCTION RECORD

VERTICAL DATUM

REV	DATE	DESCRIPTION	BY

REVISIONS

CRW ENGINEERING GROUP, LLC
3940 ARCTIC BLVD. SUITE 300
ANCHORAGE, ALASKA 99503
PHONE: (907) 562–3252
#AECL882–AK

CONSULTANT

STATE OF ALASKA 49 TH Robert W. Burdick CE-123959 REGISTERED PROFESSIONAL ENGINEER

SEAL

MUNICIPALITY OF ANCHORAGE

PROJECT MANAGEMENT AND ENGINEERING DEPARTMENT

14–50 IMAGE DRIVE / REFLECTION DRIVE AREA ROAD RECONSTRUCTION – PHASE 2 SCHED A

DRIVEWAY RECONSTRUCTION PLANS

SCALE HOR. 1"=10' VER. N/A | GRID SW1638, SW1738 | DATE SEPT 2019 | STATUS 65% | SHEET R14 of R15

File: J:\JobsData\10133.00 Image Reflection Area Reconstruction\00 CADD\01 Working Set\01 Civil\Phase 2\10133.00 Driveway Reconstruction – Phase 2.dwg

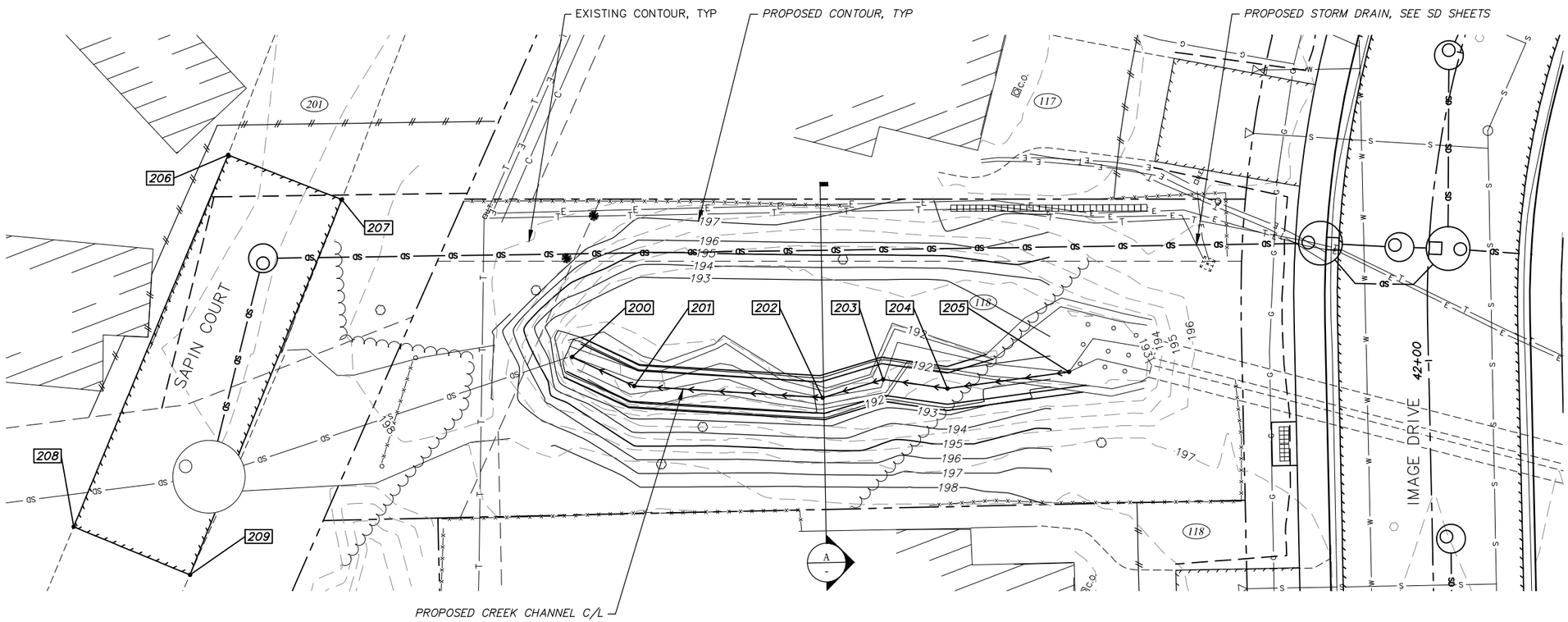

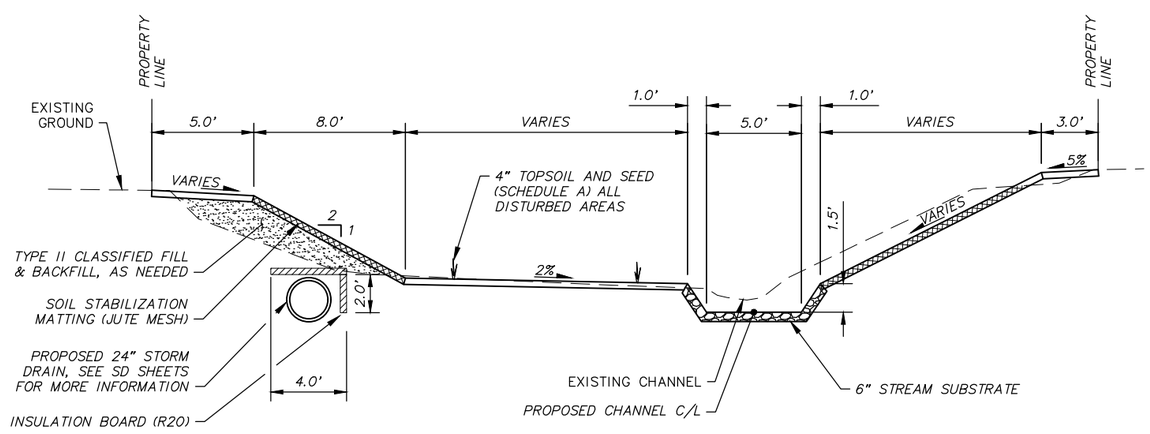

A

CREEK SECTION

SCALE: NTS

☐ CREEK CENTERLINE POINT SUMMARY

POINT	NORTHING	EASTING	ELEVATION (FT)	REMARKS
200				
201				
202				
203				
204				
205				
206				
207				
208				
209				

TO BE COMPLETED FOR 95%

RECORD DRAWING

1. DATA PROVIDED BY: _____ TITLE: _____
   THIS WILL SERVE TO CERTIFY THAT THESE RECORD DRAWINGS ARE A TRUE AND ACCURATE REPRESENTATION OF THE PROJECT AS CONSTRUCTED.
   CONTRACTOR: _____
   BY: _____ TITLE: _____ DATE: _____
2. DATA TRANSFERRED BY: _____ TITLE: _____
   COMPANY: _____ DATE: _____
3. BASED ON PERIODIC FIELD OBSERVATIONS BY THE ENGINEER (OR AN INDIVIDUAL UNDER HIS/HER DIRECT SUPERVISION), THE CONTRACTOR-PROVIDED DATA APPEARS TO REPRESENT THE PROJECT AS CONSTRUCTED.
   DATA TRANSFER CHECKED BY: _____ TITLE: _____
   COMPANY: _____ DATE: _____
   BY: _____

DATA	DRAWN BY	CHECKED BY
BASE		
TOPOGRAPHY		
PROFILE		
STORM SEWER		
WATER/SANITARY SEWER		
GAS		
TELEPHONE		
ELECTRIC		
DESIGN		
QUANTITIES		
PRELIMINARY/FINAL		
MUNICIPAL/STATE		

PLAN CHECK

GRAPHIC 20 10 0 10 20 SCALE

FIELD BOOKS	BM NO.	LOCATION	ELEV.
DESIGN			
STAKING			
ASBUILT			
CONTRACTOR	BASIS OF THIS DATUM		
INSPECTOR			

CONSTRUCTION RECORD — VERTICAL DATUM

REV	DATE	DESCRIPTION	BY

REVISIONS

CRW ENGINEERING GROUP, LLC
3940 ARCTIC BLVD. SUITE 300
ANCHORAGE, ALASKA 99503
PHONE: (907) 562-3252
#AECL882-AK

CONSULTANT

STATE OF ALASKA 49TH Robert W. Burdick CE-123959 REGISTERED PROFESSIONAL ENGINEER

SEAL

MUNICIPALITY OF ANCHORAGE

PROJECT MANAGEMENT AND ENGINEERING DEPARTMENT

14-50 IMAGE DRIVE / REFLECTION DRIVE AREA ROAD RECONSTRUCTION – PHASE 2 SCHED A

PARCEL 118 & 201 GRADING PLAN

SCALE HOR. 1"=10' VER. N/A | GRID SW1638, SW1738 | DATE SEPT 2019 | STATUS 65% | SHEET R15 of R15

File:J:\JobsData\10133.00 Image Reflection Area Reconstruction\00 CADD\01 Working Set\01 Civil\Phase 2\10133.00 Creek Grading Plan.dwg

DRIVEWAY SUMMARY

SHEET	PARCEL	CENTERLINE REFERENCE STATION	CENTERLINE REFERENCE OFFSET	DRIVEWAY WIDTH AT CURB/ROW (FT)	SKEW ANGLE (DEGREES)	LANDING LENGTH (FT)	LANDING GRADE	TOTAL DISTANCE (FT)	EXISTING GRADE	PROPOSED GRADE	SURFACE TYPE ON PROPERTY	CONSTRUCT PER DETAIL	REMARKS
R1	121	40+63.46	LT	22	−90	5.0	1.5%	19.5	5.4%	6.0%	ASPHALT	DETAIL 1, SHEET D3	
R1	120	41+16.93	LT	28	−90	5.0	1.5%	20.4	4.0%	4.6%	ASPHALT	DETAIL 1, SHEET D3	
R1	119	41+57.69	LT	19	−90	5.0	1.5%	24.9	4.5%	5.5%	ASPHALT	DETAIL 1, SHEET D3	
R1	117	42+33.10	LT	16.8	−88	5.0	1.5%	28.2	3.2%	4.4%	ASPHALT	DETAIL 1, SHEET D3	
R1	116	42+57.96	LT	15.3	−98	5.0	1.5%	30.4	5.5%	5.4%	ASPHALT	DETAIL 1, SHEET D3	
R1	115	42+87.13	LT	19	−90	5.0	1.5%	22.9	5.2%	6.2%	ASPHALT	DETAIL 1, SHEET D3	
R1	114	43+20.95	LT	16	−90	5.0	1.5%	20.7	4.9%	4.8%	ASPHALT	DETAIL 1, SHEET D3	
R2	113	44+27.06	LT	17.5	−90			24.0	7.8%	5.4%	ASPHALT	DETAIL 2, SHEET D3	
R2	183	44+34.26	RT	17	90	5.0	1.5%	21.0	6.9%	6.0%	ASPHALT	DETAIL 1, SHEET D3	
R2	182	44+71.11	RT	18	90	5.0	1.8%	19.5	7.3%	6.0%	ASPHALT	DETAIL 1, SHEET D3	
R2	112	44+72.36	LT	21	−90	0.0	N/A	19.5	5.5%	3.7%	ASPHALT	DETAIL 2, SHEET D3	
R2	181	45+08.12	RT	19	90	5.0	1.5%	19.5	6.3%	4.2%	ASPHALT	DETAIL 1, SHEET D3	
R2	111	45+11.75	LT	17	−90	0.0	N/A	19.5	5.6%	4.0%	ASPHALT	DETAIL 2, SHEET D3	
R2	180	45+46.09	RT	17.5	90	5.0	1.8%	19.5	7.2%	5.9%	ASPHALT	DETAIL 1, SHEET D3	
R2	110	45+49.60	LT	17.5	−90	0.0	N/A	19.5	4.3%	2.5%	ASPHALT	DETAIL 2, SHEET D3	
R2	109	45+82.63	LT	17	−89	0.0	N/A	19.6	6.2%	6.0%	ASPHALT	DETAIL 2, SHEET D3	
R2	179	46+13.15	RT	17.5	95	5.0	1.8%	19.5	8.9%	8.9%	ASPHALT	DETAIL 1, SHEET D3	
R2	108	46+15.46	LT	17	−85	0.0	N/A	19.5	6.6%	5.7%	ASPHALT	DETAIL 2, SHEET D3	
R2	107	46+44.87	LT	17	−85	0.0	N/A	26.8	9.0%	6.9%	ASPHALT	DETAIL 2, SHEET D3	
R2	178	46+61.22	RT	18	88	5.0	1.8%	19.5	6.8%	6.3%	ASPHALT	DETAIL 1, SHEET D3	
R2	106	46+83.08	LT	18	−93	0.0	N/A	26.0	11.6%	11.2%	ASPHALT	DETAIL 2, SHEET D3	
R2	105	47+13.58	LT	20	−99	0.0	N/A	27.2	9.3%	9.4%	ASPHALT	DETAIL 2, SHEET D3	
R2	104	47+54.14	LT	17.5	−110	0.0	N/A	10.8	7.3%	8.2%	ASPHALT	DETAIL 2, SHEET D3	
R2	177	47+58.87	RT	22.3	91	5.0	1.5%	40.7	10.2%	10.1%	ASPHALT	DETAIL 1, SHEET D3	
R3	88	48+56.85	LT	32	−77	0.0	N/A	16.7	4.8%	4.2%	ASPHALT	DETAIL 2, SHEET D3	
R3	176	48+67.10	RT	19.5	95	5.0	1.5%	19.6	8.6%	8.5%	ASPHALT	DETAIL 1, SHEET D3	
R3	175	49+29.95	RT	18	91	5.0	1.5%	19.5	9.4%	7.3%	ASPHALT	DETAIL 1, SHEET D3	
R3	174	49+87.95	RT	18	86	5.0	1.5%	19.5	8.0%	6.8%	ASPHALT	DETAIL 1, SHEET D3	
R3	173	50+28.87	RT	27.5	76	5.0	1.5%	25.0	7.1%	5.2%	ASPHALT	DETAIL 1, SHEET D3	
R3	172	50+73.97	RT	30	69	5.0	1.5%	20.4	5.8%	5.7%	ASPHALT	DETAIL 1, SHEET D3	
R3	171	51+12.70	RT	19.5	79	5.0	1.5%	19.7	7.8%	7.5%	ASPHALT	DETAIL 1, SHEET D3	
R3	86	51+25.38	LT	16	−114	0.0	N/A	22.8	9.6%	8.4%	ASPHALT	DETAIL 2, SHEET D3	
R3	170	51+48.17	RT	18	86	5.0	1.5%	19.5	9.6%	8.4%	ASPHALT	DETAIL 1, SHEET D3	
R3	85	51+62.80	LT	9.5	−106	0.0	N/A	20.3	5.2%	5.1%	ASPHALT	DETAIL 2, SHEET D3	
R3	169	51+83.30	RT	26.5	88	5.0	1.5%	19.5	8.9%	8.5%	ASPHALT	DETAIL 1, SHEET D3	
R3	84	51+93.12	LT	17	−100	0.0	N/A	20.2	5.4%	6.1%	ASPHALT	DETAIL 2, SHEET D3	
R3	83	52+30.88	LT	30	−94	0.0	N/A	19.5	8.3%	8.3%	ASPHALT	DETAIL 2, SHEET D3	
R3	82	52+68.03	LT	26.5	−86	0.0	N/A	20.3	5.7%	7.6%	ASPHALT	DETAIL 2, SHEET D3	
R4	81	53+16.01	LT	10	−78	0.0	N/A	21.2	8.0%	8.8%	ASPHALT	DETAIL 2, SHEET D3	
R4	80	53+50.76	LT	21.3	−71	0.0	N/A	20.5	8.0%	6.2%	ASPHALT	DETAIL 2, SHEET D3	
R4	79	53+79.41	LT	17.5	−77	0.0	N/A	20.9	6.2%	6.1%	ASPHALT	DETAIL 2, SHEET D3	
R4	158	53+82.07	RT	18	96	5.0	1.5%	17.9	8.3%	8.2%	ASPHALT	DETAIL 1, SHEET D3	
R4	157	54+19.60	RT	18.5	95	5.0	1.5%	22.0	8.4%	9.5%	ASPHALT	DETAIL 1, SHEET D3	
R4	156	54+55.72	RT	18	96	5.0	1.5%	22.5	5.8%	6.7%	ASPHALT	DETAIL 1, SHEET D3	
R4	155	54+96.70	RT	25	94	5.0	1.5%	19.5	8.1%	8.3%	ASPHALT	DETAIL 1, SHEET D3	
R4	154	55+34.22	RT	17.5	92	5.0	1.5%	28.6	10.2%	10.2%	ASPHALT	DETAIL 1, SHEET D3	
R4	153	55+80.80	RT	28.5	82	5.0	1.5%	21.1	5.8%	6.6%	ASPHALT	DETAIL 1, SHEET D3	
R4	152	56+44.55	RT	17.5	93	5.0	1.5%	23.9	13.4%	13.1%	ASPHALT	DETAIL 1, SHEET D3	
R4	151	56+82.74	RT	22	90	5.0	1.5%	19.5	10.4%	9.0%	ASPHALT	DETAIL 1, SHEET D3	

RECONSTRUCT DRIVEWAY NOTES:.

1. *"LANDING LENGTH" BEGINS AT THE BACK OF CURB & GUTTER.*
2. *"LANDING GRADE" IS THE GRADE OF THE LANDING FROM THE BACK OF CURB & GUTTER TO THE END OF LANDING.*
3. *"SKEW ANGLE" ("+" IS CLOCKWISE AND "−" IS COUNTER CLOCKWISE) IS MEASURED FROM PROJECT CENTERLINE WITH 0 DEGREES ALIGNED ALONG INCREASING STATIONS.*
4. *"TOTAL DISTANCE" IS THE LIMIT OF RECONSTRUCTION BEGINNING AT THE BACK OF CURB & GUTTER.*
5. *"PROPOSED GRADE" IS APPROXIMATE GRADE FROM THE END OF THE LANDING TO THE LIMIT OF RECONSTRUCTION. ACTUAL CONSTRUCTION GRADE MAY VARY.*
6. *SEE SHEET T2 FOR RECONSTRUCT DRIVEWAY SUMMARY TABLE CONTINUED.*

RECORD DRAWING

1. DATA PROVIDED BY: _____ TITLE: _____
   THIS WILL SERVE TO CERTIFY THAT THESE RECORD DRAWINGS ARE A TRUE AND ACCURATE REPRESENTATION OF THE PROJECT AS CONSTRUCTED.
   CONTRACTOR: _____
   BY: _____ TITLE: _____ DATE: _____
2. DATA TRANSFERRED BY: _____ TITLE: _____
   COMPANY: _____ DATE: _____
3. BASED ON PERIODIC FIELD OBSERVATIONS BY THE ENGINEER (OR AN INDIVIDUAL UNDER HIS/HER DIRECT SUPERVISION), THE CONTRACTOR-PROVIDED DATA APPEARS TO REPRESENT THE PROJECT AS CONSTRUCTED.
   DATA TRANSFER CHECKED BY: _____ TITLE: _____
   COMPANY: _____ DATE: _____
   BY: _____

DATA	DRAWN BY	CHECKED BY
BASE	TS	MJ
TOPOGRAPHY	TS	MJ
PROFILE	RB	JK
STORM SEWER	JH	JK
WATER/SANITARY SEWER	MV	JK
GAS	MV	JK
TELEPHONE	MV	JK
ELECTRIC	TK	BM
DESIGN	RB	JK
QUANTITIES	RB	JK
PRELIMINARY/FINAL	RB	JK
MUNICIPAL/STATE	RB	JK

PLAN CHECK

FIELD BOOKS	BM NO.	LOCATION	ELEV.
DESIGN CRW Books 147, 148, & 151	GAAB 66	See page D-24 of the MOA Benchmark Book	238.10
	GAAB 96	See page D-26 of the MOA Benchmark Book	313.83
STAKING			
ASBUILT			
CONTRACTOR	BASIS OF THIS DATUM GAAB 1972 ADJUST		
INSPECTOR			

CONSTRUCTION RECORD — VERTICAL DATUM

REV	DATE	DESCRIPTION	BY

REVISIONS

CRW ENGINEERING GROUP, LLC
3940 ARCTIC BLVD. SUITE 300
ANCHORAGE, ALASKA 99503
PHONE: (907) 562-3252
#AECL882-AK

CONSULTANT

STATE OF ALASKA 49TH — Robert W. Burdick CE-123959 — REGISTERED PROFESSIONAL ENGINEER

SEAL

MUNICIPALITY OF ANCHORAGE

PROJECT MANAGEMENT AND ENGINEERING DEPARTMENT

14-50 IMAGE DRIVE / REFLECTION DRIVE AREA ROAD RECONSTRUCTION – PHASE 2 SCHED A

ROADWAY SUMMARY TABLES

SCALE HOR. N/A VER. N/A | GRID SW1638, SW1738 | DATE SEPT 2019 | STATUS 65% | SHEET T1 of T6

File: J:\JobsData\10133.00 Image Reflection Area Reconstruction\00 CADD\01 Working Set\01 Civil\Phase 2\10133.00 Summary Tables – Roadway – Phase 2.dwg

DRIVEWAY SUMMARY (CONTINUED)

SHEET	PARCEL	CENTERLINE REFERENCE		DRIVEWAY WIDTH AT CURB/ROW (FT)	SKEW ANGLE (DEGREES)	LANDING LENGTH (FT)	LANDING GRADE	TOTAL DISTANCE (FT)	EXISTING GRADE	PROPOSED GRADE	SURFACE TYPE ON PROPERTY	CONSTRUCT PER DETAIL	REMARKS
		STATION	OFFSET										
R5	46	25+07.15	RT	24	90	5.0	1.5%	19.5	5.4%	7.0%	ASPHALT	DETAIL 1, SHEET D3	
R5	47	25+47.64	RT	25	90	5.0	1.5%	19.5	11.2%	8.7%	ASPHALT	DETAIL 1, SHEET D3	
R5	48	25+90.40	RT	29	88	5.0	1.5%	19.5	10.8%	9.3%	ASPHALT	DETAIL 1, SHEET D3	
R5	62	25+97.19	LT	20.5	−94	5.0	1.5%	19.5	3.6%	3.3%	ASPHALT	DETAIL 1, SHEET D3	
R5	61	26+27.50	LT	22	−104	5.0	1.5%	20.0	3.7%	3.2%	ASPHALT	DETAIL 1, SHEET D3	
R5	60	26+56.79	LT	30.5	−122	5.0	1.5%	21.3	2.5%	2.6%	ASPHALT	DETAIL 1, SHEET D3	
R5	59	26+70.65	LT	16.5	−117	5.0	1.5%	60.5	2.3%	0.7%	ASPHALT	DETAIL 1, SHEET D3	
R5	58	26+85.06	LT	16	−102	19.0	2.0%	28.7	6.5%	7.0%	ASPHALT	DETAIL 2, SHEET D3	
R5	57	26+98.33	LT	14.5	−76	21.0	1.5%	29.3	0.4%	5.8%	ASPHALT	DETAIL 2, SHEET D3	
R5	56	27+10.06	LT	19	−58	5.0	2.0%	29.7	8.2%	9.0%	ASPHALT	DETAIL 1, SHEET D3	
R5	55	27+23.32	LT	20.5	−43	5.0	2.0%	21.5	13.8%	13.7%	ASPHALT	DETAIL 1, SHEET D3	
R5	54	27+41.19	LT	16.5	−57	5.0	1.5%	20.2	7.3%	7.0%	ASPHALT	DETAIL 1, SHEET D3	
R5	49	27+42.74	RT	30.1	84	5.0	1.5%	25.4	4.8%	4.0%	ASPHALT	DETAIL 1, SHEET D3	
R5	53	27+78.83	LT	10	−75	5.0	2.0%	19.8	14.6%	14.5%	ASPHALT	DETAIL 1, SHEET D3	
R5	50	27+86.42	RT	33.6	83	5.0	1.5%	24.1	−3.4%	−4.8%	ASPHALT	DETAIL 1, SHEET D3	
R5	52	28+00.54	LT	29	−81	5.0	1.5%	19.0	14.8%	14.7%	ASPHALT	DETAIL 1, SHEET D3	
R5	51	28+37.32	LT	16	−88	5.0	1.5%	18.5	11.4%	11.4%	ASPHALT	DETAIL 1, SHEET D3	
R6	200	62+52.32	RT	17	90	0.0	N/A	31.0	6.1%	7.8%	ASPHALT	DETAIL 2, SHEET D3	
R6	199	62+87.11	RT	17	96	0.0	N/A	15.6	7.3%	7.0%	ASPHALT	DETAIL 2, SHEET D3	
R6	198	63+19.94	RT	19	92	0.0	N/A	32.0	4.0%	5.1%	ASPHALT	DETAIL 2, SHEET D3	
R6	197	63+53.57	RT	19	95	0.0	N/A	19.0	3.3%	4.6%	ASPHALT	DETAIL 2, SHEET D3	
R6	184	63+62.80	LT	17	−70	0.0	N/A	21.4	8.5%	9.5%	ASPHALT	DETAIL 2, SHEET D3	
R6	196	63+89.53	RT	17	96	0.0	N/A	15.6	5.5%	5.5%	ASPHALT	DETAIL 2, SHEET D3	
R6	195	64+26.87	RT	19	103	0.0	N/A	18.0	5.7%	4.8%	ASPHALT	DETAIL 2, SHEET D3	
R6	194	64+51.45	RT	18	102	0.0	N/A	22.2	6.4%	6.5%	ASPHALT	DETAIL 2, SHEET D3	
R6	185	64+58.00	LT	18	−79	0.0	N/A	18.9	5.2%	5.8%	ASPHALT	DETAIL 2, SHEET D3	
R6	193	64+73.55	RT	15	93	0.0	N/A	15.1	5.6%	5.1%	ASPHALT	DETAIL 2, SHEET D3	
R6	192	64+84.46	RT	14	60	0.0	N/A	14.6	3.0%	3.8%	ASPHALT	DETAIL 2, SHEET D3	
R6	186	64+94.09	LT	16.5	−67	0.0	N/A	15.0	6.8%	6.6%	ASPHALT	DETAIL 2, SHEET D3	
R6	191	65+00.37	RT	13	44	0.0	N/A	14.6	3.9%	3.0%	ASPHALT	DETAIL 2, SHEET D3	
R6	187	65+07.25	LT	16.5	−47	0.0	N/A	14.7	6.4%	5.9%	ASPHALT	DETAIL 2, SHEET D3	
R6	190	65+09.88	RT	13.8	34	0.0	N/A	21.0	2.6%	2.8%	ASPHALT	DETAIL 2, SHEET D3	
R6	189	65+11.38	RT	16	0	0.0	N/A	24.0	5.8%	5.2%	ASPHALT	DETAIL 2, SHEET D3	
R6	188	65+12.20	LT	16.5	−22	0.0	N/A	19.0	6.6%	6.2%	ASPHALT	DETAIL 2, SHEET D3	
R7	103	71+06.28	LT	22	−67	0.0	N/A	7.0	12.8%	11.1%	ASPHALT	DETAIL 2, SHEET D3	
R7	89	71+34.45	RT	17	105	0.0	N/A	7.0	3.6%	4.5%	ASPHALT	DETAIL 2, SHEET D3	
R7	102	71+47.27	LT	17	−76	0.0	N/A	7.0	15.0%	13.6%	ASPHALT	DETAIL 2, SHEET D3	
R7	90	71+73.74	RT	24	95	0.0	N/A	7.0	2.4%	3.4%	ASPHALT	DETAIL 2, SHEET D3	
R7	101	71+83.68	LT	21	−87	0.0	N/A	10.9	4.9%	8.6%	ASPHALT	DETAIL 2, SHEET D3	
R7	100	72+08.03	LT	17.5	−81	0.0	N/A	11.0	3.8%	4.4%	ASPHALT	DETAIL 2, SHEET D3	
R7	91	72+15.78	RT	18	86	0.0	N/A	13.4	2.1%	1.0%	ASPHALT	DETAIL 2, SHEET D3	
R7	92	72+37.26	RT	11.5	60	0.0	N/A	7.0	2.2%	3.1%	ASPHALT	DETAIL 2, SHEET D3	
R7	99	72+44.53	LT	15	−81	0.0	N/A	7.0	7.7%	6.3%	ASPHALT	DETAIL 2, SHEET D3	
R7	93	72+59.56	RT	16	128	0.0	N/A	11.9	3.9%	3.1%	ASPHALT	DETAIL 2, SHEET D3	
R7	98	72+64.28	LT	15.5	−52	0.0	N/A	7.0	4.8%	4.3%	ASPHALT	DETAIL 2, SHEET D3	
R7	94	72+70.06	RT	10.5	28	0.0	N/A	8.8	7.0%	5.0%	ASPHALT	DETAIL 2, SHEET D3	
R7	95	72+83.77	RT	9.5	23	0.0	N/A	5.9	3.0%	2.0%	ASPHALT	DETAIL 2, SHEET D3	
R7	97	72+86.06	LT	13.7	−28	0.0	N/A	19.3	10.1%	9.8%	ASPHALT	DETAIL 2, SHEET D3	
R7	96	72+88.29	LT	21.3	−3	0.0	N/A	18.8	12.6%	9.3%	ASPHALT	DETAIL 2, SHEET D3	

RECONSTRUCT DRIVEWAY NOTES:

1. *"LANDING LENGTH" BEGINS AT THE BACK OF CURB & GUTTER.*
2. *"LANDING GRADE" IS THE GRADE OF THE LANDING FROM THE BACK OF CURB & GUTTER TO THE END OF LANDING.*
3. *"SKEW ANGLE" ("+" IS CLOCKWISE AND "−" IS COUNTER CLOCKWISE) IS MEASURED FROM PROJECT CENTERLINE WITH 0 DEGREES ALIGNED ALONG INCREASING STATIONS.*
4. *"TOTAL DISTANCE" IS THE LIMIT OF RECONSTRUCTION BEGINNING AT THE BACK OF CURB & GUTTER.*
5. *"PROPOSED GRADE" IS APPROXIMATE GRADE FROM THE END OF THE LANDING TO THE LIMIT OF RECONSTRUCTION. ACTUAL CONSTRUCTION GRADE MAY VARY.*
6. *SEE SHEET T3 FOR RECONSTRUCT DRIVEWAY SUMMARY TABLE CONTINUED.*

RECORD DRAWING

1. DATA PROVIDED BY: _____ TITLE: _____
   THIS WILL SERVE TO CERTIFY THAT THESE RECORD DRAWINGS ARE A TRUE AND ACCURATE REPRESENTATION OF THE PROJECT AS CONSTRUCTED.
   CONTRACTOR: _____
   BY: _____ TITLE: _____ DATE: _____
2. DATA TRANSFERRED BY: _____ TITLE: _____
   COMPANY: _____ DATE: _____
3. BASED ON PERIODIC FIELD OBSERVATIONS BY THE ENGINEER (OR AN INDIVIDUAL UNDER HIS/HER DIRECT SUPERVISION), THE CONTRACTOR-PROVIDED DATA APPEARS TO REPRESENT THE PROJECT AS CONSTRUCTED.
   DATA TRANSFER CHECKED BY: _____ TITLE: _____
   COMPANY: _____ DATE: _____
   BY: _____

DATA	DRAWN BY	CHECKED BY
BASE	TS	MJ
TOPOGRAPHY	TS	MJ
PROFILE	RB	JK
STORM SEWER	JH	JK
WATER/SANITARY SEWER	MV	JK
GAS	MV	JK
TELEPHONE	MV	JK
ELECTRIC	TK	BM
DESIGN	RB	JK
QUANTITIES	RB	JK
PRELIMINARY/FINAL	RB	JK
MUNICIPAL/STATE	RB	JK

PLAN CHECK

FIELD BOOKS
DESIGN CRW Books 147, 148, & 151
STAKING
ASBUILT
CONTRACTOR
INSPECTOR

CONSTRUCTION RECORD

BM NO.	LOCATION	ELEV.
GAAB 66	See page D-24 of the MOA Benchmark Book	238.10
GAAB 96	See page D-26 of the MOA Benchmark Book	313.83

BASIS OF THIS DATUM GAAB 1972 ADJUST

VERTICAL DATUM

REV	DATE	DESCRIPTION	BY

REVISIONS

CRW ENGINEERING GROUP, LLC
3940 ARCTIC BLVD. SUITE 300
ANCHORAGE, ALASKA 99503
PHONE: (907) 562-3252
#AECL882-AK

CONSULTANT

STATE OF ALASKA 49TH Robert W. Burdick CE-123959 REGISTERED PROFESSIONAL ENGINEER

SEAL

MUNICIPALITY OF ANCHORAGE

PROJECT MANAGEMENT AND ENGINEERING DEPARTMENT

14-50 IMAGE DRIVE / REFLECTION DRIVE AREA ROAD RECONSTRUCTION – PHASE 2 SCHED A

ROADWAY SUMMARY TABLES

SCALE HOR. N/A VER. N/A | GRID SW1638, SW1738 | DATE SEPT 2019 | STATUS 65% | SHEET T2 of T6

File: J:\JobsData\10133.00 Image Reflection Area Reconstruction\00 CADD\01 Working Set\01 Civil\Phase 2\10133.00 Summary Tables – Roadway – Phase 2.dwg

DRIVEWAY SUMMARY (CONTINUED)

SHEET	PARCEL	CENTERLINE REFERENCE STATION	CENTERLINE REFERENCE OFFSET	DRIVEWAY WIDTH AT CURB/ROW (FT)	SKEW ANGLE (DEGREES)	LANDING LENGTH (FT)	LANDING GRADE	TOTAL DISTANCE (FT)	EXISTING GRADE	PROPOSED GRADE	SURFACE TYPE ON PROPERTY	CONSTRUCT PER DETAIL	REMARKS
R8	168	80+74.45	RT	22	94	0.0	N/A	10.3	2.9%	3.4%	ASPHALT	DETAIL 2, SHEET D3	
R8	159	81+23.26	LT	16.5	−101	0.0	N/A	14.5	5.4%	7.6%	ASPHALT	DETAIL 2, SHEET D3	
R8	167	81+24.65	RT	21	80	0.0	N/A	15.0	4.7%	6.4%	ASPHALT	DETAIL 2, SHEET D3	
R8	160	81+38.41	LT	17	−77	0.0	N/A	14.5	8.2%	8.8%	ASPHALT	DETAIL 2, SHEET D3	
R8	166	81+46.41	RT	19.7	67	0.0	N/A	14.5	3.5%	3.6%	ASPHALT	DETAIL 2, SHEET D3	
R8	161	81+54.61	LT	15.5	−56	0.0	N/A	13.1	5.7%	5.5%	ASPHALT	DETAIL 2, SHEET D3	
R8	165	81+58.63	RT	17.4	41	0.0	N/A	14.6	0.5%	1.0%	ASPHALT	DETAIL 2, SHEET D3	
R8	162	81+65.32	LT	16.5	−27	0.0	N/A	14.5	5.0%	5.5%	ASPHALT	DETAIL 2, SHEET D3	
R8	164	81+69.21	RT	19	17	0.0	N/A	32.3	1.0%	1.0%	ASPHALT	DETAIL 2, SHEET D3	
R8	163	81+71.23	LT	17	−6	0.0	N/A	14.5	3.5%	3.5%	ASPHALT	DETAIL 2, SHEET D3	
R9	63	90+99.52	RT	18	116	5.0	1.5%	19.6	4.2%	4.5%	ASPHALT	DETAIL 1, SHEET D3	
R9	78	91+11.04	LT	17.5	−64	5.0	1.5%	17.3	5.3%	4.8%	ASPHALT	DETAIL 1, SHEET D3	
R9	64	91+31.14	RT	18	116	5.0	1.5%	16.0	5.2%	5.5%	ASPHALT	DETAIL 1, SHEET D3	
R9	77	91+50.21	LT	17.5	−64	5.0	1.5%	17.3	4.6%	5.3%	ASPHALT	DETAIL 1, SHEET D3	
R9	76	91+84.17	LT	18	−63	5.0	1.5%	17.4	4.1%	4.4%	ASPHALT	DETAIL 1, SHEET D3	
R9	74	92+18.51	LT	17	−130	5.0	1.5%	16.0	6.8%	5.0%	ASPHALT	DETAIL 1, SHEET D3	
R9	75	92+18.51	LT	18.5	−151	5.0	1.5%	16.0	4.9%	3.0%	ASPHALT	DETAIL 1, SHEET D3	
R9	73	92+31.56	LT	18	−142	5.0	1.5%	16.0	10.6%	8.7%	ASPHALT	DETAIL 1, SHEET D3	
R9	72	92+43.51	LT	19.5	−122	5.0	1.5%	17.2	15.1%	9.5%	ASPHALT	DETAIL 1, SHEET D3	
R9	71	92+53.49	LT	17	−103	5.0	1.5%	16.1	16.8%	10.6%	ASPHALT	DETAIL 1, SHEET D3	
R9	70	92+76.57	LT	22.5	−90	5.0	1.5%	16.0	14.8%	8.8%	ASPHALT	DETAIL 1, SHEET D3	
R9	69	92+95.04	LT	17.5	−67	5.0	1.5%	16.0	14.8%	11.3%	ASPHALT	DETAIL 1, SHEET D3	
R9	65	92+98.01	RT	18	64	5.0	1.5%	27.6	3.6%	3.0%	ASPHALT	DETAIL 1, SHEET D3	
R9	68	93+10.30	LT	17	−44	5.0	1.5%	16.0	15.6%	12.2%	ASPHALT	DETAIL 1, SHEET D3	
R9	67	93+20.29	LT	17.5	−14	5.0	1.5%	16.0	9.4%	6.8%	ASPHALT	DETAIL 1, SHEET D3	
R9	66	93+23.07	RT	17.5	26	5.0	1.5%	16.1	8.0%	5.2%	ASPHALT	DETAIL 1, SHEET D3	

RECONSTRUCT DRIVEWAY NOTES:

1. *"LANDING LENGTH" BEGINS AT THE BACK OF CURB & GUTTER.*
2. *"LANDING GRADE" IS THE GRADE OF THE LANDING FROM THE BACK OF CURB & GUTTER TO THE END OF LANDING.*
3. *"SKEW ANGLE" ("+" IS CLOCKWISE AND "−" IS COUNTER CLOCKWISE) IS MEASURED FROM PROJECT CENTERLINE WITH 0 DEGREES ALIGNED ALONG INCREASING STATIONS.*
4. *"TOTAL DISTANCE" IS THE LIMIT OF RECONSTRUCTION BEGINNING AT THE BACK OF CURB & GUTTER.*
5. *"PROPOSED GRADE" IS APPROXIMATE GRADE FROM THE END OF THE LANDING TO THE LIMIT OF RECONSTRUCTION. ACTUAL CONSTRUCTION GRADE MAY VARY.*

30.02

P.C.C. CURB AND GUTTER (ALL TYPES)

SHEET	STATION TO STATION	OFFSET (FT)	LENGTH (FT)	REMARKS
R1	BOP TO 44+20	LT	380	INCLUDES SIDE STREETS & DRIVEWAYS
R1	BOP TO 44+20	RT	369	INCLUDES SIDE STREETS & DRIVEWAYS
R2	44+20 TO 48+20	LT	411	INCLUDES SIDE STREETS & DRIVEWAYS
R2	44+20 TO 48+20	RT	381	INCLUDES SIDE STREETS & DRIVEWAYS
R3	48+20 TO 52+80	LT	465	INCLUDES DRIVEWAYS
R3	48+20 TO 52+80	RT	455	INCLUDES DRIVEWAYS
R4	52+80 TO 57+05	LT	418	INCLUDES SIDE STREETS & DRIVEWAYS
R4	52+80 TO 57+05	RT	412	INCLUDES SIDE STREETS & DRIVEWAYS
R5	24+81 TO 28+61	LT	558	INCLUDES SIDE STREETS & DRIVEWAYS
R5	24+81 TO 28+61	RT	354	INCLUDES SIDE STREETS & DRIVEWAYS

30.02

P.C.C. CURB AND GUTTER (ALL TYPES)

SHEET	STATION TO STATION	OFFSET (FT)	LENGTH (FT)	REMARKS
R6	60+75 TO 61+63	LT	89	MIRAGE CIRCLE
R6	62+36 TO 65+13	LT	285	MIRAGE CIRCLE
R6	60+75 TO 61+63	RT	89	MIRAGE CIRCLE
R6	62+36 TO 65+13	RT	326	MIRAGE CIRCLE
R7	70+40 TO 72+88	LT	294	KEYANN CIRCLE
R7	70+40 TO 72+88	RT	273	KEYANN CIRCLE
R8	80+34 TO 81+71	LT	152	IMAGE CIRCLE
R8	80+34 TO 81+71	RT	179	IMAGE CIRCLE
R9	90+35 TO EOP	LT	368	RIDGELAKE CIRCLE
R9	90+35 TO EOP	RT	191	RIDGELAKE CIRCLE

PCC CURB & GUTTER (ALL TYPES) NOTES:

1. *SEE INTERSECTION LAYOUT SHEETS SHEETS R10–R12 FOR LOCATIONS AND TYPES OF CURB AND GUTTER.*

RECORD DRAWING

1. DATA PROVIDED BY: _____ TITLE: _____
   THIS WILL SERVE TO CERTIFY THAT THESE RECORD DRAWINGS ARE A TRUE AND ACCURATE REPRESENTATION OF THE PROJECT AS CONSTRUCTED.
   CONTRACTOR: _____
   BY: _____ TITLE: _____ DATE: _____
2. DATA TRANSFERRED BY: _____ TITLE: _____
   COMPANY: _____ DATE: _____
3. BASED ON PERIODIC FIELD OBSERVATIONS BY THE ENGINEER (OR AN INDIVIDUAL UNDER HIS/HER DIRECT SUPERVISION), THE CONTRACTOR–PROVIDED DATA APPEARS TO REPRESENT THE PROJECT AS CONSTRUCTED.
   DATA TRANSFER CHECKED BY: _____ TITLE: _____
   COMPANY: _____ DATE: _____
   BY: _____

DATA	DRAWN BY	CHECKED BY
BASE	TS	MJ
TOPOGRAPHY	TS	MJ
PROFILE	RB	JK
STORM SEWER	JH	JK
WATER/SANITARY SEWER	MV	JK
GAS	MV	JK
TELEPHONE	MV	JK
ELECTRIC	TK	BM
DESIGN	RB	JK
QUANTITIES	RB	JK
PRELIMINARY/FINAL	RB	JK
MUNICIPAL/STATE	RB	JK

PLAN CHECK

FIELD BOOKS	BM NO.	LOCATION	ELEV.
DESIGN CRW Books 147, 148, & 151	GAAB 66	See page D–24 of the MOA Benchmark Book	238.10
	GAAB 96	See page D–26 of the MOA Benchmark Book	313.83
STAKING			
ASBUILT			
CONTRACTOR	BASIS OF THIS DATUM GAAB 1972 ADJUST		
INSPECTOR			

CONSTRUCTION RECORD

VERTICAL DATUM

REV	DATE	DESCRIPTION	BY

REVISIONS

CRW ENGINEERING GROUP, LLC
3940 ARCTIC BLVD. SUITE 300
ANCHORAGE, ALASKA 99503
PHONE: (907) 562–3252
#AECL882–AK

CONSULTANT

STATE OF ALASKA 49TH Robert W. Burdick CE-123959 REGISTERED PROFESSIONAL ENGINEER

SEAL

MUNICIPALITY OF ANCHORAGE

PROJECT MANAGEMENT AND ENGINEERING DEPARTMENT

14–50 IMAGE DRIVE / REFLECTION DRIVE AREA ROAD RECONSTRUCTION – PHASE 2 SCHED A

ROADWAY SUMMARY TABLES

SCALE HOR. N/A VER. N/A | GRID SW1638, SW1738 | DATE SEPT 2019 | STATUS 65% | SHEET T3 of T6

File:J:\JobsData\10133.00 Image Reflection Area Reconstruction\00 CADD\01 Working Set\01 Civil\Phase 2\10133.00 Summary Tables – Roadway – Phase 2.dwg

30.03

P.C.C. SIDEWALK

SHEET	APPX BEGIN STA	APPX OFFSET (FT)	APPX END STA	APPX OFFSET (FT)	4" THICK, AREA (SY)	6" THICK, AREA (SY)	REMARKS
R1	40+36.0	16.5 LT	40+52.5	16.5 LT	9	0	
R1	40+36.0	16.5 RT	43+48.6	17.7 RT	169	0	
R1	40+52.5	16.5 LT	40+74.5	16.5 LT	0	12	PARCEL 121 DRIVEWAY
R1	40+74.5	16.5 LT	41+02.9	16.5 LT	16	0	
R1	41+02.9	16.5 LT	41+30.9	16.5 LT	0	16	PARCEL 120 DRIVEWAY
R1	41+30.9	16.5 LT	41+48.2	16.5 LT	10	0	
R1	41+48.2	16.5 LT	41+67.2	16.5 LT	0	11	PARCEL 119 DRIVEWAY
R1	41+67.2	16.5 LT	42+25.8	16.5 LT	34	0	
R1	42+25.8	16.5 LT	42+40.3	16.5 LT	0	9	PARCEL 117 DRIVEWAY
R1	42+40.3	16.5 LT	42+50.7	16.5 LT	7	0	
R1	42+50.7	16.5 LT	42+64.2	16.5 LT	0	8	PARCEL 116 DRIVEWAY
R1	42+64.2	16.5 LT	42+77.6	16.5 LT	8	0	
R1	42+77.6	16.5 LT	42+96.6	16.5 LT	0	11	PARCEL 115 DRIVEWAY
R1	42+96.6	16.5 LT	43+13.0	16.5 LT	9	0	
R1	43+13.0	16.5 LT	43+29.0	16.5 LT	0	9	PARCEL 114 DRIVEWAY
R1	43+29.0	16.5 LT	43+47.1	16.5 LT	10	0	
R1	44+06.0	16.5 RT	44+25.8	16.5 RT	11	0	
R2	44+25.8	16.5 RT	44+42.8	16.5 RT	0	9	PARCEL 183 DRIVEWAY
R2	44+42.8	16.5 RT	44+62.1	16.5 RT	11	0	
R2	44+62.1	16.5 RT	44+80.1	16.5 RT	0	10	PARCEL 182 DRIVEWAY
R2	44+80.1	16.5 RT	44+98.6	16.5 RT	10	0	
R2	44+98.6	16.5 RT	45+17.6	16.5 RT	0	11	PARCEL 181 DRIVEWAY
R2	45+17.6	16.5 RT	45+37.3	16.5 RT	11	0	
R2	45+37.3	16.5 RT	45+54.8	16.5 RT	0	10	PARCEL 180 DRIVEWAY
R2	45+54.8	16.5 RT	46+02.8	16.5 RT	25	0	
R2	46+02.8	16.5 RT	46+22.4	16.5 RT	0	10	PARCEL 179 DRIVEWAY
R2	46+22.4	16.5 RT	46+54.5	16.5 RT	15	0	
R2	46+54.5	16.5 RT	46+71.5	16.5 RT	0	10	PARCEL 178 DRIVEWAY
R2	46+71.5	16.5 RT	47+49.3	16.5 RT	39	0	
R2	47+49.3	16.5 RT	47+68.2	16.5 RT	0	10	PARCEL 177 DRIVEWAY
R2	47+68.2	16.5 RT	48+55.6	16.5 RT	44	0	
R3	48+55.6	16.5 RT	48+77.5	16.5 RT	0	11	PARCEL 176 DRIVEWAY
R3	48+77.5	16.5 RT	49+19.8	16.5 RT	21	0	
R3	49+19.8	16.5 RT	49+39.8	16.5 RT	0	10	PARCEL 175 DRIVEWAY
R3	49+39.8	16.5 RT	49+78.3	16.5 RT	19	0	
R3	49+78.3	16.5 RT	49+98.5	16.5 RT	0	10	PARCEL 174 DRIVEWAY
R3	49+98.5	16.5 RT	50+14.7	16.5 RT	8	0	
R3	50+14.7	16.5 RT	50+46.6	16.5 RT	0	16	PARCEL 173 DRIVEWAY
R3	50+46.6	16.5 RT	50+60.7	16.5 RT	8	0	
R3	50+60.7	16.5 RT	50+90.3	16.5 RT	0	18	PARCEL 172 DRIVEWAY
R3	50+90.3	16.5 RT	51+04.3	16.5 RT	8	0	
R3	51+04.3	16.5 RT	51+22.7	16.5 RT	0	11	PARCEL 171 DRIVEWAY
R3	51+22.7	16.5 RT	51+40.1	16.5 RT	10	0	
R3	51+40.1	16.5 RT	51+56.8	16.5 RT	0	10	PARCEL 170 DRIVEWAY
R3	51+56.8	16.5 RT	51+71.1	16.5 RT	8	0	
R3	51+71.1	16.5 RT	51+95.7	16.5 RT	0	15	PARCEL 169 DRIVEWAY
R3	51+95.7	16.5 RT	53+11.3	16.5 RT	68	0	

30.03

P.C.C. SIDEWALK (CONTINUED)

SHEET	APPX BEGIN STA	APPX OFFSET (FT)	APPX END STA	APPX OFFSET (FT)	4" THICK, AREA (SY)	6" THICK, AREA (SY)	REMARKS
R4	53+64.1	16.5 RT	53+72.8	16.5 RT	5	0	
R4	53+72.8	16.5 RT	53+90.6	16.5 RT	0	10	PARCEL 158 DRIVEWAY
R4	53+90.6	16.5 RT	54+09.8	16.5 RT	11	0	
R4	54+09.8	16.5 RT	54+28.4	16.5 RT	0	10	PARCEL 157 DRIVEWAY
R4	54+28.4	16.5 RT	54+46.1	16.5 RT	10	0	
R4	54+46.1	16.5 RT	54+64.2	16.5 RT	0	10	PARCEL 156 DRIVEWAY
R4	54+64.2	16.5 RT	54+83.1	16.5 RT	11	0	
R4	54+83.1	16.5 RT	55+09.6	16.5 RT	0	14	PARCEL 155 DRIVEWAY
R4	55+09.6	16.5 RT	55+24.8	16.5 RT	8	0	
R4	55+13.6	16.5 RT	57+12.6	16.5 RT	114	0	
R4	57+12.6	16.5 RT	55+43.3	16.5 RT	0	10	PARCEL 154 DRIVEWAY
R4	55+43.3	16.5 RT	55+66.3	16.5 RT	12	0	
R4	55+66.3	16.5 RT	55+96.8	16.5 RT	0	16	PARCEL 153 DRIVEWAY
R4	55+96.8	16.5 RT	56+34.9	16.5 RT	20	0	
R4	56+34.9	16.5 RT	56+53.5	16.5 RT	0	10	PARCEL 152 DRIVEWAY
R4	56+53.5	16.5 RT	56+71.7	16.5 RT	10	0	
R4	56+71.7	16.5 RT	56+93.7	16.5 RT	0	12	PARCEL 151 DRIVEWAY
R4	56+93.7	16.5 RT	57+12.6	18.2 RT	10	0	
R5	24+81.0	16.5 RT	24+95.2	16.5 RT	8	0	
R5	24+95.2	16.5 RT	25+19.2	16.5 RT	0	13	PARCEL 46 DRIVEWAY
R5	25+19.2	16.5 RT	25+35.1	16.5 RT	9	0	
R5	25+35.1	16.5 RT	25+60.1	16.5 RT	0	14	PARCEL 47 DRIVEWAY
R5	25+60.1	16.5 RT	25+73.3	16.5 RT	8	0	
R5	25+70.7	17.7 LT	25+88.0	16.5 LT	9	0	
R5	25+88.0	16.5 RT	26+07.7	16.5 RT	0	16	PARCEL 48 DRIVEWAY
R5	26+07.7	16.5 RT	26+05.9	16.5 LT	0	11	PARCEL 62 DRIVEWAY
R5	26+05.9	16.5 LT	26+16.4	16.5 LT	7	0	
R5	26+16.4	16.5 RT	27+30.2	16.5 RT	59	0	
R5	27+30.2	16.5 RT	26+37.0	17.4 LT	0	13	PARCEL 61 DRIVEWAY
R5	26+37.0	17.4 LT	26+46.1	21.0 LT	6	0	
R5	26+46.1	21.0 LT	26+76.1	57.8 LT	0	30	PARCEL 60&59 DRIVEWAY
R5	26+76.1	57.8 LT	26+80.6	60.9 LT	4	0	
R5	26+80.6	60.9 LT	26+90.3	56.8 LT	0	9	PARCEL 58 DRIVEWAY
R5	26+90.3	56.8 LT	26+90.3	65.2 LT	3	0	
R5	26+90.3	65.2 LT	27+27.0	38.9 LT	0	33	PARCEL 57,56,55 DRIVEWAY
R5	27+27.0	38.9 LT	27+34.7	26.7 LT	8	0	
R5	27+34.7	16.5 RT	28+06.2	16.5 RT	0	37	PARCEL 49&50 DRIVEWAY
R5	28+06.2	16.5 RT	27+48.6	17.9 LT	0	10	PARCEL 54 DRIVEWAY
R5	27+48.6	17.9 LT	27+75.4	16.5 LT	16	0	
R5	27+75.4	16.5 LT	28+13.9	16.5 LT	0	24	PARCEL 53,52 DRIVEWAY
R5	28+13.9	16.5 RT	28+60.6	16.5 RT	29	0	
R5	28+60.6	16.5 RT	28+29.5	16.5 LT	9	0	
R5	28+29.5	16.5 LT	28+45.5	16.5 LT	0	9	PARCEL 51 DRIVEWAY
R5	28+45.5	16.5 LT	28+60.6	16.5 LT	8	0	

P.C.C. SIDEWALK NOTES:

1. *SEE SHEET T5 FOR P.C.C. SIDEWALK SUMMARY TABLE CONTINUED.*

RECORD DRAWING

1. DATA PROVIDED BY: _____ TITLE: _____
   THIS WILL SERVE TO CERTIFY THAT THESE RECORD DRAWINGS ARE A TRUE AND ACCURATE REPRESENTATION OF THE PROJECT AS CONSTRUCTED.
   CONTRACTOR: _____
   BY: _____ TITLE: _____ DATE: _____
2. DATA TRANSFERRED BY: _____ TITLE: _____
   COMPANY: _____ DATE: _____
3. BASED ON PERIODIC FIELD OBSERVATIONS BY THE ENGINEER (OR AN INDIVIDUAL UNDER HIS/HER DIRECT SUPERVISION), THE CONTRACTOR-PROVIDED DATA APPEARS TO REPRESENT THE PROJECT AS CONSTRUCTED.
   DATA TRANSFER CHECKED BY: _____ TITLE: _____
   COMPANY: _____ DATE: _____
   BY: _____

DATA	DRAWN BY	CHECKED BY
BASE	TS	MJ
TOPOGRAPHY	TS	MJ
PROFILE	RB	JK
STORM SEWER	JH	JK
WATER/SANITARY SEWER	MV	JK
GAS	MV	JK
TELEPHONE	MV	JK
ELECTRIC	TK	BM
DESIGN	RB	JK
QUANTITIES	RB	JK
PRELIMINARY/FINAL	RB	JK
MUNICIPAL/STATE	RB	JK

PLAN CHECK

FIELD BOOKS
DESIGN CRW Books 147, 148, & 151
STAKING
ASBUILT
CONTRACTOR
INSPECTOR

CONSTRUCTION RECORD

BM NO.	LOCATION	ELEV.
GAAB 66	See page D-24 of the MOA Benchmark Book	238.10
GAAB 96	See page D-26 of the MOA Benchmark Book	313.83

BASIS OF THIS DATUM GAAB 1972 ADJUST

VERTICAL DATUM

REV	DATE	DESCRIPTION	BY

REVISIONS

CRW ENGINEERING GROUP, LLC
3940 ARCTIC BLVD. SUITE 300
ANCHORAGE, ALASKA 99503
PHONE: (907) 562-3252
#AECL882-AK

CONSULTANT

SEAL

MUNICIPALITY OF ANCHORAGE

PROJECT MANAGEMENT AND ENGINEERING DEPARTMENT

14-50 IMAGE DRIVE / REFLECTION DRIVE AREA ROAD RECONSTRUCTION - PHASE 2 SCHED A

ROADWAY SUMMARY TABLES

SCALE HOR. N/A VER. N/A | GRID SW1638, SW1738 | DATE SEPT 2019 | STATUS 65% | SHEET T4 of T6

File: J:\JobData\10133.00 Image Reflection Area Reconstruction\00 CADD\01 Working Set\01 Civil\Phase 2\10133.00 Summary Tables - Roadway - Phase 2.dwg

30.03

P.C.C. SIDEWALK (CONTINUED)

SHEET	APPX BEGIN STA	APPX OFFSET (FT)	APPX END STA	APPX OFFSET (FT)	4" THICK, AREA (SY)	6" THICK, AREA (SY)	REMARKS
R9	90+27.4	17.0 RT	90+87.0	15.5 RT	33	0	
R9	90+28.1	17.3 LT	91+03.8	17.3 LT	42	0	
R9	90+87.0	15.5 RT	91+07.4	15.8 RT	0	11	PARCEL 63 DRIVEWAY
R9	91+03.8	15.5 LT	91+23.3	15.5 LT	0	11	PARCEL 78 DRIVEWAY
R9	91+07.4	15.8 RT	91+22.5	19.5 RT	8	0	
R9	91+22.5	19.5 RT	91+39.6	29.0 RT	0	11	PARCEL 64 DRIVEWAY
R9	91+23.3	15.5 LT	91+42.9	15.5 LT	11	0	
R9	91+39.6	29.0 RT	92+92.8	46.3 RT	14	0	
R9	91+42.9	15.5 LT	91+62.4	15.5 LT	0	11	PARCEL 77 DRIVEWAY
R9	91+62.4	15.5 LT	91+76.6	15.5 LT	8	0	
R9	91+76.6	15.5 LT	91+96.9	15.5 LT	0	11	PARCEL 76 DRIVEWAY
R9	91+96.9	15.5 LT	92+18.5	15.5 LT	12	0	
R9	92+18.5	15.5 LT	92+18.6	31.9 LT	0	22	PARCEL 75&74 DRIVEWAY
R9	92+18.6	31.9 LT	92+23.9	35.4 LT	4	0	
R9	92+23.9	35.4 LT	93+23.1	8.7 LT	0	78	PARCEL 67–73 DRIVEWAY
R9	93+23.1	8.7 LT	93+12.9	27.9 RT	0	15	PARCEL 65 DRIVEWAY
R9	93+12.9	27.9 RT	93+20.9	15.5 RT	9	0	
R9	93+20.9	15.5 RT	93+24.0	0.1 LT	0	9	PARCEL 66 DRIVEWAY
R9	93+24.0	0.1 LT	93+24.0	0.1 LT	5	0	

30.04

P.C.C. CURB RAMP (6" THICK) & DETECTABLE WARNINGS

SHEET	APPX STATION	OFFSET	CURB RAMP AREA (SY)	DETECTABLE WARNING AREA (SF)	CURB RAMP TYPE	REMARKS
R1	43+54	LT	7	12	PARALLEL	IMAGE DRIVE
R1	43+55	RT	7	12	PARALLEL	IMAGE DRIVE
R1	43+99	RT	7	12	PARALLEL	IMAGE DRIVE
R5	25+18	RT	7	12	PARALLEL	IMAGE DRIVE
R5	25+64	LT	8	12	PARALLEL	IMAGE DRIVE
R8	53+18	RT	7	12	PARALLEL	IMAGE CIRCLE
R8	53+58	RT	7	12	PARALLEL	IMAGE CIRCLE
R9	90+22	LT	7	12	PARALLEL	REFLECTION DRIVE
R9	90+21	RT	8	12	PARALLEL	REFLECTION DRIVE

PCC CURB RAMP & DETECTABLE WARNING NOTES:

1. *SEE INTERSECTION LAYOUT SHEETS R10–R12 FOR LOCATIONS OF CURB RAMPS AND DETECTABLE WARNINGS.*

40.07

ASPHALT SPEED HUMP

SHEET	STATION	REMARKS
R2	44+90.73	IMAGE DRIVE
R4	54+01.74	IMAGE DRIVE

50.06

REMOVE AND REPLACE MANHOLE CONE SECTION OR MANHOLE COVER AND FRAME

SHEET	STATION	OFFSET (FT)	CONE SECTION	COVER AND FRAME	REMARKS
R1	42+38	7.2 RT		X	IMAGE DRIVE
R1	43+69	10.1 RT		X	IMAGE DRIVE
R2	46+05	7.9 RT		X	IMAGE DRIVE
R2	46+74	9.1 RT		X	IMAGE DRIVE
R2	48+04	0.7 RT		X	IMAGE DRIVE
R3	49+47	5.9 RT	X		IMAGE DRIVE
R3	51+98	13.6 RT	X		IMAGE DRIVE
R4	53+26	11.7 RT		X	IMAGE DRIVE
R4	54+99	10.2 RT		X	IMAGE DRIVE
R5	26+14	6.7 RT		X	DEFIANCE STREET
R5	26+96	18.1 LT		X	DEFIANCE STREET
R6	62+90	12.0 RT	X		MIRAGE CIRCLE
R7	71+23	1.3 RT		X	KEYANN CIRCLE
R7	72+36	1.8 RT		X	KEYANN CIRCLE
R8	81+00	1.0 RT	X		IMAGE CIRCLE
R9	91+60	11.7 RT		X	RIDGELAKE CIRCLE

SANITARY SEWER MANHOLE CONE/RING NOTES:

1. *SEE MASS DETAILS 50–25 AND 50–26.*
2. *COORDINATE W/ ENGINEER IN FIELD TO VERIFY WHETHER CONE SECTION OR MANHOLE COVER AND FRAME REPLACEMENT IS REQUIRED.*

50.09

ADJUST CLEANOUT TO FINISH GRADE

SHEET	STATION	OFFSET (FT)	REMARKS
R4	56+56	8.1 RT	IMAGE DRIVE
R5	26+92	58.2 LT	DEFIANCE STREET
R5	28+39	9.6 RT	DEFIANCE STREET
R6	64+86	30.9 RT	MIRAGE CIRCLE
R7	72+82	5.8 LT	KEYANN CIRCLE
R8	81+66	4.3 LT	IMAGE CIRCLE
R9	92+89	31.2 LT	RIDGELAKE CIRCLE

RECORD DRAWING

1. DATA PROVIDED BY: _____ TITLE: _____
   THIS WILL SERVE TO CERTIFY THAT THESE RECORD DRAWINGS ARE A TRUE AND ACCURATE REPRESENTATION OF THE PROJECT AS CONSTRUCTED.
   CONTRACTOR: _____
   BY: _____ TITLE: _____ DATE: _____
2. DATA TRANSFERRED BY: _____ TITLE: _____
   COMPANY: _____ DATE: _____
3. BASED ON PERIODIC FIELD OBSERVATIONS BY THE ENGINEER (OR AN INDIVIDUAL UNDER HIS/HER DIRECT SUPERVISION), THE CONTRACTOR–PROVIDED DATA APPEARS TO REPRESENT THE PROJECT AS CONSTRUCTED.
   DATA TRANSFER CHECKED BY: _____ TITLE: _____
   COMPANY: _____ DATE: _____
   BY: _____

DATA	DRAWN BY	CHECKED BY
BASE	TS	MJ
TOPOGRAPHY	TS	MJ
PROFILE	RB	JK
STORM SEWER	JH	JK
WATER/SANITARY SEWER	MV	JK
GAS	MV	JK
TELEPHONE	MV	JK
ELECTRIC	TK	BM
DESIGN	RB	JK
QUANTITIES	RB	JK
PRELIMINARY/FINAL	RB	JK
MUNICIPAL/STATE	RB	JK

PLAN CHECK

FIELD BOOKS	BM NO.	LOCATION	ELEV.
DESIGN CRW Books 147, 148, & 151	GAAB 66	See page D–24 of the MOA Benchmark Book	238.10
	GAAB 96	See page D–26 of the MOA Benchmark Book	313.83
STAKING			
ASBUILT			
CONTRACTOR	BASIS OF THIS DATUM GAAB 1972 ADJUST		
INSPECTOR			

CONSTRUCTION RECORD — VERTICAL DATUM

REV	DATE	DESCRIPTION	BY

REVISIONS

CRW ENGINEERING GROUP, LLC
3940 ARCTIC BLVD. SUITE 300
ANCHORAGE, ALASKA 99503
PHONE: (907) 562–3252
#AECL882–AK

CONSULTANT

STATE OF ALASKA 49TH Robert W. Burdick CE-123959 REGISTERED PROFESSIONAL ENGINEER

SEAL

MUNICIPALITY OF ANCHORAGE

PROJECT MANAGEMENT AND ENGINEERING DEPARTMENT

14–50 IMAGE DRIVE / REFLECTION DRIVE AREA ROAD RECONSTRUCTION – PHASE 2 SCHED A

ROADWAY SUMMARY TABLES

SCALE HOR. N/A VER. N/A | GRID SW1638, SW1738 | DATE SEPT 2019 | STATUS 65% | SHEET T5 of T6

File: J:\JobsData\10133.00 Image Reflection Area Reconstruction\00 CADD\01 Working Set\01 Civil\Phase 2\10133.00 Summary Tables – Roadway – Phase 2.dwg

60.03 & 60.05

REMOVE AND REPLACE VALVE BOX TOP SECTION OR ADJUST KEY BOX

SHEET	STATION	OFFSET (FT)	KEY BOX	VALVE BOX TOP SECTION	REMARKS
R1	40+70	29.2 LT	X		IMAGE DRIVE
R1	40+71	11.4 LT		X	IMAGE DRIVE
R1	41+04	31.3 LT	X		IMAGE DRIVE
R1	41+52	29.8 LT	X		IMAGE DRIVE
R1	42+41	30.8 LT	X		IMAGE DRIVE
R1	42+49	31.1 LT	X		IMAGE DRIVE
R1	42+97	31.2 LT	X		IMAGE DRIVE
R1	44+07	12.5 LT		X	IMAGE DRIVE
R1	44+10	14.8 LT		X	IMAGE DRIVE
R2	45+23	31.3 LT	X		IMAGE DRIVE
R3	45+25	29.9 RT	X		IMAGE DRIVE
R2	45+32	30.8 LT	X		IMAGE DRIVE
R2	47+08	31.7 LT	X		IMAGE DRIVE
R2	47+72	28.4 RT	X		IMAGE DRIVE
R2	47+87	17.6 LT		X	IMAGE DRIVE
R3	48+91	11.1 LT		X	IMAGE DRIVE
R3	50+94	30.9 RT	X		IMAGE DRIVE
R3	51+23	31.0 LT	X		IMAGE DRIVE
R3	52+18	12.0 LT		X	IMAGE DRIVE
R3	52+24	31.8 LT	X		IMAGE DRIVE
R4	52+85	31.4 LT	X		IMAGE DRIVE
R4	53+68	13.4 LT		X	IMAGE DRIVE
R4	54+09	28.8 RT	X		IMAGE DRIVE
R4	54+84	30.5 RT	X		IMAGE DRIVE
R4	55+11	11.4 LT		X	IMAGE DRIVE
R4	56+62	30.2 LT	X		IMAGE DRIVE
R4	56+71	21.6 RT	X		IMAGE DRIVE
R5	24+97	28.5 RT	X		DEFIANCE STREET
R5	25+01	13.3 LT		X	DEFIANCE STREET
R5	25+10	11.4 LT		X	DEFIANCE STREET
R5	25+68	11.3 LT		X	DEFIANCE STREET
R5	26+34	32.7 LT	X		DEFIANCE STREET
R5	26+40	36.6 LT	X		DEFIANCE STREET
R5	26+79	87.6 LT	X		DEFIANCE STREET
R5	27+03	87.6 LT	X		DEFIANCE STREET
R5	27+58	28.9 RT	X		DEFIANCE STREET
R5	27+73	30.6 RT	X		DEFIANCE STREET
R5	28+37	8.0 LT		X	DEFIANCE STREET
R6	61+71	15.1 LT		X	MIRAGE CIRCLE
R6	63+30	24.7 RT	X		MIRAGE CIRCLE
R6	63+97	24.8 RT	X		MIRAGE CIRCLE
R6	64+58	48.0 RT	X		MIRAGE CIRCLE
R6	64+93	43.3 RT	X		MIRAGE CIRCLE
R6	64+99	38.6 RT	X		MIRAGE CIRCLE
R6	65+16	18.7 RT	X		MIRAGE CIRCLE
R6	65+17	26.0 LT	X		MIRAGE CIRCLE
R6	65+19	9.4 RT	X		MIRAGE CIRCLE
R6	65+20	16.4 RT	X		MIRAGE CIRCLE

60.03 & 60.05

REMOVE AND REPLACE VALVE BOX TOP SECTION OR ADJUST KEY BOX (CONTINUED)

SHEET	STATION	OFFSET (FT)	KEY BOX	VALVE BOX TOP SECTION	REMARKS
R7	70+37	9.2 LT		X	KEYANN CIRCLE
R7	72+00	29.5 LT	X		KEYANN CIRCLE
R7	72+56	49.7 RT	X		KEYANN CIRCLE
R7	72+88	28.6 RT	X		KEYANN CIRCLE
R7	72+96	0.8 LT	X		KEYANN CIRCLE
R7	72+96	10.3 LT	X		KEYANN CIRCLE
R8	80+32	11.3 LT		X	IMAGE CIRCLE
R8	80+51	13.1 LT		X	IMAGE CIRCLE
R8	81+01	39.0 RT	X		IMAGE CIRCLE
R8	81+29	50.9 LT	X		IMAGE CIRCLE
R8	81+38	50.7 LT	X		IMAGE CIRCLE
R8	81+57	43.5 RT	X		IMAGE CIRCLE
R8	81+64	36.2 RT	X		IMAGE CIRCLE
R8	81+64	37.2 LT	X		IMAGE CIRCLE
R8	81+71	30.7 LT	X		IMAGE CIRCLE
R8	81+80	0.0 RT	X		IMAGE CIRCLE
R8	81+80	9.2 RT	X		IMAGE CIRCLE
R9	90+18	12.1 LT		X	RIDGELAKE CIRCLE
R9	91+00	7.5 LT		X	RIDGELAKE CIRCLE
R9	91+11	23.7 LT	X		RIDGELAKE CIRCLE
R9	91+32	37.9 RT	X		RIDGELAKE CIRCLE
R9	91+77	105.3 RT	X		RIDGELAKE CIRCLE
R9	91+79	24.4 LT	X		RIDGELAKE CIRCLE
R9	92+19	30.2 LT	X		RIDGELAKE CIRCLE
R9	92+19	33.3 LT	X		RIDGELAKE CIRCLE
R9	92+38	49.0 LT	X		RIDGELAKE CIRCLE
R9	92+58	49.4 LT	X		RIDGELAKE CIRCLE
R9	92+70	49.8 LT	X		RIDGELAKE CIRCLE
R9	93+02	44.9 LT	X		RIDGELAKE CIRCLE
R9	93+12	43.0 LT	X		RIDGELAKE CIRCLE

SPECIAL FILL GRADING TABLE

SHEET	APPROX BEGIN STATION	APPROX END STATION	OFFSET	REMARKS
R1	40+36	40+66	21.5 RT	IMAGE DRIVE
R1	40+95	41+39	21.5 RT	IMAGE DRIVE
R1	43+25	43+48	21.5 RT	IMAGE DRIVE
R2	44+14	44+26	21.5 RT	IMAGE DRIVE
R2	44+36	44+62	16.5 LT	IMAGE DRIVE
R2	44+80	44+99	21.5 RT	IMAGE DRIVE
R2	44+83	45+03	16.5 LT	IMAGE DRIVE
R2	45+18	5+37	21.5 RT	IMAGE DRIVE
R2	45+20	45+41	16.5 LT	IMAGE DRIVE
R2	45+55	46+03	21.5 RT	IMAGE DRIVE
R2	45+58	45+74	16.5 LT	IMAGE DRIVE
R2	45+91	46+08	16.5 LT	IMAGE DRIVE
R2	46+22	46+54	21.5 RT	IMAGE DRIVE
R2	46+23	46+37	16.5 LT	IMAGE DRIVE

SPECIAL FILL GRADING TABLE (CONTINUED)

SHEET	APPROX BEGIN STATION	APPROX END STATION	OFFSET	REMARKS
R3	48+97	49+20	21.5 RT	IMAGE DRIVE
R3	49+40	49+78	21.5 RT	IMAGE DRIVE
R3	49+98	50+15	21.5 RT	IMAGE DRIVE
R3	50+47	50+61	21.5 RT	IMAGE DRIVE
R3	50+90	51+04	21.5 RT	IMAGE DRIVE
R3	50+99	51+16	16.5 LT	IMAGE DRIVE
R3	51+23	51+40	21.5 RT	IMAGE DRIVE
R3	51+48	51+58	16.5 LT	IMAGE DRIVE
R3	51+57	51+71	21.5 RT	
R4	55+10	55+25	21.5 RT	IMAGE DRIVE
R5	25+60	25+75	21.5 RT	DEFIANCE STREET
R5	25+73	25+88	21.5 LT	DEFIANCE STREET
R5	26+08	26+69	21.5 RT	DEFIANCE STREET
R5	27+22	27+30	21.5 RT	DEFIANCE STREET
R5	27+50	27+60	21.5 LT	DEFIANCE STREET
R5	28+06	28+61	21.5 RT	DEFIANCE STREET
R6	64+35	64+44	22.5 RT	MIRAGE CIRCLE
R6	64+90	64+96	34.0 RT	MIRAGE CIRCLE
R6	65+03	65+07	21.5 RT	MIRAGE CIRCLE
R7	72+18	72+37	35.0 LT	KEYANN CIRCLE
R7	72+45	72+51	41.4 RT	KEYANN CIRCLE
R7	72+52	72+57	40.5 LT	KEYANN CIRCLE
R7	72+71	72+79	30.0 LT	KEYANN CIRCLE
R7	72+87	72+86	12.0 RT	KEYANN CIRCLE
R8	81+64	81+66	20.0 RT	IMAGE CIRCLE
R8	81+71	81+71	5.0 RT	IMAGE CIRCLE
R9	91+43	92+97	44.0 RT	RIDGELAKE CIRCLE
R9	92+19	92+19	25.9 RT	RIDGELAKE CIRCLE
R9	92+19	92+21	39.8 LT	RIDGELAKE CIRCLE
R9	92+38	92+43	45.4 LT	RIDGELAKE CIRCLE
R9	92+61	92+65	45.5 LT	RIDGELAKE CIRCLE
R9	93+16	93+26	26.5 LT	RIDGELAKE CIRCLE
R9	93+28	93+29	5.0 LT	RIDGELAKE CIRCLE

SPECIAL FILL GRADING NOTES:

1. *SPECIAL FILL GRADING SHALL BE PER DETAIL 2, SHEET C3.*
2. *LOCATIONS ARE APPROXIMATE, CONTRACTOR SHALL MODIFY LOCATIONS IN THE FIELD PER THE DIRECTION OF THE ENGINEER OR AS NECESSARY TO PROVIDE POSITIVE DRAINAGE TOWARD ROADWAY. THIS WORK SHALL BE INCIDENTAL TO THE CONTRACT AND NO SEPARATE PAYMENT SHALL BE MADE.*

RECORD DRAWING

1. DATA PROVIDED BY: _____ TITLE: _____
   THIS WILL SERVE TO CERTIFY THAT THESE RECORD DRAWINGS ARE A TRUE AND ACCURATE REPRESENTATION OF THE PROJECT AS CONSTRUCTED.
   CONTRACTOR: _____
   BY: _____ TITLE: _____ DATE: _____
2. DATA TRANSFERRED BY: _____ TITLE: _____
   COMPANY: _____ DATE: _____
3. BASED ON PERIODIC FIELD OBSERVATIONS BY THE ENGINEER (OR AN INDIVIDUAL UNDER HIS/HER DIRECT SUPERVISION), THE CONTRACTOR-PROVIDED DATA APPEARS TO REPRESENT THE PROJECT AS CONSTRUCTED.
   DATA TRANSFER CHECKED BY: _____ TITLE: _____
   COMPANY: _____ DATE: _____
   BY: _____

DATA	DRAWN BY	CHECKED BY
BASE	TS	MJ
TOPOGRAPHY	TS	MJ
PROFILE	RB	JK
STORM SEWER	JH	JK
WATER/SANITARY SEWER	MV	JK
GAS	MV	JK
TELEPHONE	MV	JK
ELECTRIC	TK	BM
DESIGN	RB	JK
QUANTITIES	RB	JK
PRELIMINARY/FINAL	RB	JK
MUNICIPAL/STATE	RB	JK

PLAN CHECK

FIELD BOOKS	BM NO.	LOCATION	ELEV.
DESIGN CRW Books 147, 148, & 151	GAAB 66	See page D-24 of the MOA Benchmark Book	238.10
	GAAB 96	See page D-26 of the MOA Benchmark Book	313.83
STAKING			
ASBUILT			
CONTRACTOR	BASIS OF THIS DATUM GAAB 1972 ADJUST		
INSPECTOR			

CONSTRUCTION RECORD — VERTICAL DATUM

REV	DATE	DESCRIPTION	BY

REVISIONS

CRW ENGINEERING GROUP, LLC
3940 ARCTIC BLVD. SUITE 300
ANCHORAGE, ALASKA 99503
PHONE: (907) 562-3252
#AECL882-AK

CONSULTANT

STATE OF ALASKA — 49 TH — Robert W. Burdick CE-123959 — REGISTERED PROFESSIONAL ENGINEER

SEAL

MUNICIPALITY OF ANCHORAGE

PROJECT MANAGEMENT AND ENGINEERING DEPARTMENT

14-50 IMAGE DRIVE / REFLECTION DRIVE AREA ROAD RECONSTRUCTION – PHASE 2 SCHED A

ROADWAY SUMMARY TABLES

SCALE HOR. N/A VER. N/A | GRID SW1638, SW1738 | DATE SEPT 2019 | STATUS 65% | SHEET T6 of T6

File:J:\JobsData\10133.00 Image Reflection Area Reconstruction\00 CADD\01 Working Set\01 Civil\Phase 2\10133.00 Summary Tables - Roadway - Phase 2.dwg

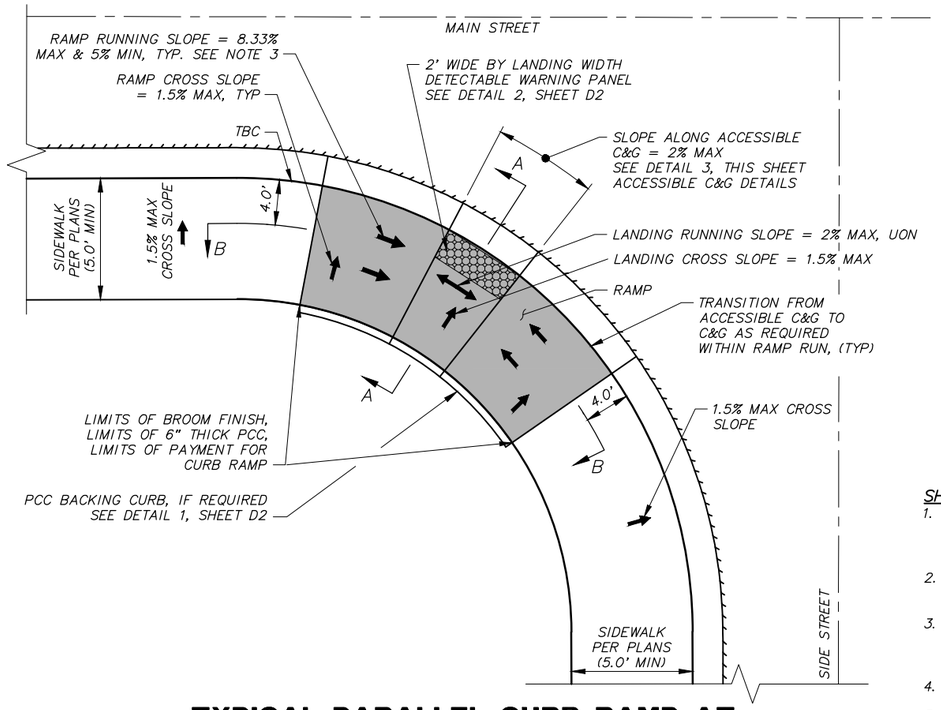

TYPICAL PARALLEL CURB RAMP AT CORNER LOCATION WITH CONNECTING SIDE STREET SIDEWALK - PLAN VIEW

1

SCALE: NTS

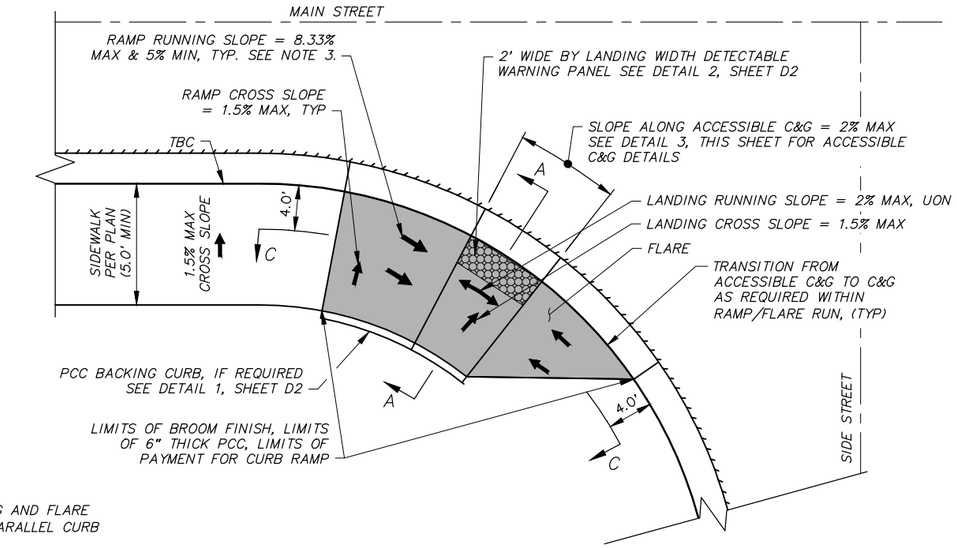

TYPICAL PARALLEL CURB RAMP AT CORNER LOCATION WITHOUT CONNECTING SIDE STREET SIDEWALK - PLAN VIEW

2

SCALE: NTS

SHEET NOTES:

1. SEE SHEETS R10–R11 FOR CURB RAMP LOCATIONS, RAMP, LANDING AND FLARE LENGTHS AND ELEVATIONS. RAMP/FLARE/LANDING LENGTH FOR PARALLEL CURB RAMPS SHALL BE AS MEASURED 4' OFF BACK OF CURB.
2. NOTIFY ENGINEER PRIOR TO INSTALLATION OF CONCRETE IF MAXIMUM/MINIMUM SLOPES CANNOT BE MAINTAINED.
3. FOR PARALLEL CURB RAMPS, RAMPS SHALL BE 15 FEET MAXIMUM. RAMPS SHALL HAVE THE OUTSIDE EDGES AND JOINTS TRIMMED WITH A 1/4–INCH RADIUS EDGING TOOL.
4. ALL SLOPES ARE IN REFERENCE TO THE HORIZONTAL.
5. MINIMUM FLOWLINE SLOPE IN CURB RETURN IS 0.5%.
6. PROVIDE CONSTANT FLOWLINE BETWEEN CHANGE IN CURB TYPE.
7. CONSTRUCT SIDEWALK ADJACENT TO CURB RAMP PER THE TYPICAL SECTIONS SHOWN ON THE "C" SHEETS.
8. PAYMENT FOR ALL PCC CURB AND GUTTER, INCLUDING MODIFIED AND TRANSITIONAL CURB, SHALL BE PAID UNDER THE BID ITEM "P.C.C. CURB & GUTTER (ALL TYPES)" AND NO SEPARATE PAYMENT SHALL BE MADE.
9. FORM BACKING CURB AS DIRECTED BY THE ENGINEER TO MATCH EXISTING GROUND. PAYMENT FOR THIS CURB SHALL BE MADE UNDER THE BID ITEM "P.C.C. CURB RAMP (6" THICK)" AND NO ADDITIONAL PAYMENT SHALL BE MADE. IF EXISTING GROUND BEHIND SIDEWALK IS GRAVEL OR GRASS, GRADE TO MATCH EXISTING GROUND. PAYMENT FOR GRADING SHALL BE MADE UNDER THE BID ITEM "P.C.C. CURB RAMP (6" THICK)" AND NO ADDITIONAL PAYMENT SHALL BE MADE. 4" TOPSOIL AND SEEDING SHALL BE PLACED ON DISTURBED GRASS AREAS PER THE LANDSCAPING PLANS.
10. CONSTRUCT RAMPS AND LANDINGS WITH A BROOM FINISH RUNNING PERPENDICULAR TO THE DIRECTION OF TRAVEL.
11. INSTALL YELLOW ADA APPROVED DETECTABLE WARNINGS (DW) PANELS UNLESS OTHERWISE NOTED IN ACCORDANCE WITH MANUFACTURER'S RECOMMENDATIONS AND THESE DRAWINGS. SET DETECTABLE WARNINGS SO THAT THE FIELD AREA AT THE BASE OF THE DOMES IS FLUSH WITH THE SURROUNDING CONCRETE. THERE SHALL BE NO LIP AT THE EDGE OF THE DETECTABLE CURB WARNINGS. SEE DETAIL 2, SHEET D2.
12. DETECTABLE WARNINGS DOMES AT PARALLEL CURB RAMPS SHALL BE ALIGNED ON A SQUARE GRID IN THE PREDOMINATE DIRECTION OF TRAVEL TO PERMIT WHEELS TO ROLL BETWEEN DOMES.
13. RAMP LOCATIONS MAY BE ADJUSTED TO ENSURE MINIMUM 48" CLEARANCE AROUND APPURTENANCES SUCH AS SIGNAL POLES, POWER POLES, LIGHT POLES, J–BOXES, SIGNS, CATCH BASINS AND MANHOLES. PRIOR TO PLACEMENT OF CONCRETE AND APPURTENANCES, THE RAMP LAYOUT AND LOCATION SHALL BE APPROVED BY THE ENGINEER.
14. GAP BETWEEN DETECTABLE WARNING PANELS AND BACK OF CURB ONLY ALLOWABLE AT CENTER OF CURB RAMPS. CORNERS OF DETECTABLE WARNINGS SHALL BE FLUSH WITH BACK OF CURB. IF REQUIRED BY THE ENGINEER CONTRACTOR SHALL CUT DETECTABLE WARNING PANELS PER THE MANUFACTURER'S RECOMMENDATIONS. CUTTING DW PANELS SHALL BE INCIDENTAL TO 30.04 DETECTABLE WARNINGS PAY ITEM AND NO SEPARATE PAYMENT SHALL BE MADE.

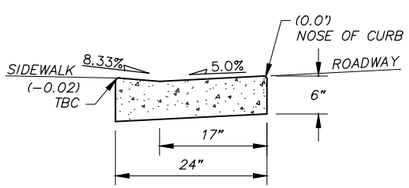

PCC CURB AND GUTTER TYPE 1A

FOR USE IN CURB RAMPS WITH TYPE 1 C&G.

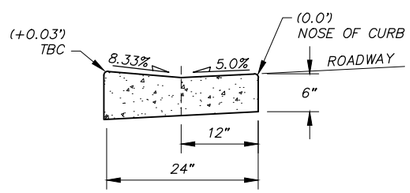

PCC CURB AND GUTTER TYPE 2A

FOR USE IN CURB RAMPS WITH TYPE 2 C&G OR AS INDICATED ON THE PLANS.

ACCESSIBLE CURB & GUTTER NOTES:

1. TRANSITION CURBS TO MAINTAIN CONSTANT FLOWLINE ACROSS CURB RAMP AND AROUND CURB RETURN IAW PLANS.
2. PAYMENT FOR ALL PCC CURB AND GUTTER, INCLUDING MODIFIED AND TRANSITIONAL CURB, SHALL BE PAID UNDER THE BID ITEM "PCC CURB & GUTTER (ALL TYPES)" AND NO SEPARATE PAYMENT SHALL BE MADE.

ACCESSIBLE CURB & GUTTER SECTIONS (TYPE 1A & TYPE 2A)

3

SCALE: NTS

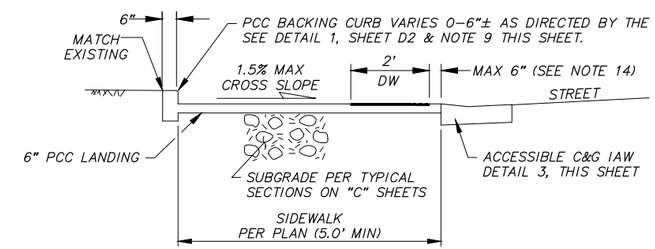

SECTION A–A

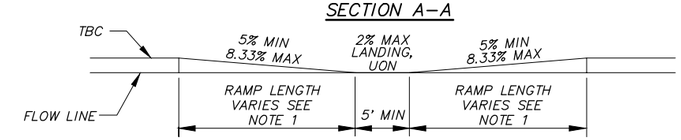

SECTION B–B

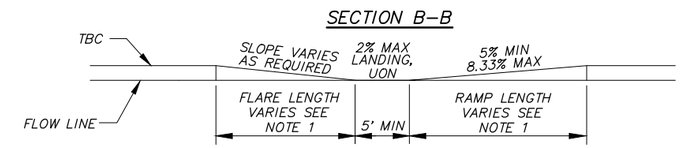

SECTION C–C

TYPICAL CURB RAMP SECTIONS

4

SCALE: NTS

RECORD DRAWING

1. DATA PROVIDED BY: _____ TITLE: _____
   THIS WILL SERVE TO CERTIFY THAT THESE RECORD DRAWINGS ARE A TRUE AND ACCURATE REPRESENTATION OF THE PROJECT AS CONSTRUCTED.
   CONTRACTOR: _____
   BY: _____ TITLE: _____ DATE: _____
2. DATA TRANSFERRED BY: _____ TITLE: _____
   COMPANY: _____ DATE: _____
3. BASED ON PERIODIC FIELD OBSERVATIONS BY THE ENGINEER (OR AN INDIVIDUAL UNDER HIS/HER DIRECT SUPERVISION), THE CONTRACTOR–PROVIDED DATA APPEARS TO REPRESENT THE PROJECT AS CONSTRUCTED.
   DATA TRANSFER CHECKED BY: _____ TITLE: _____
   COMPANY: _____ DATE: _____
   BY: _____

DATA	DRAWN BY	CHECKED BY
BASE	TS	MJ
TOPOGRAPHY	TS	MJ
PROFILE	RB	JK
STORM SEWER	JH	JK
WATER/SANITARY SEWER	MV	JK
GAS	MV	JK
TELEPHONE	MV	JK
ELECTRIC	TK	BM
DESIGN	RB	JK
QUANTITIES	RB	JK
PRELIMINARY/FINAL	RB	JK
MUNICIPAL/STATE	RB	JK

PLAN CHECK

FIELD BOOKS
DESIGN CRW Books 147, 148, & 151
STAKING
ASBUILT
CONTRACTOR
INSPECTOR

CONSTRUCTION RECORD

BM NO.	LOCATION	ELEV.
GAAB 66	See page D–24 of the MOA Benchmark Book	238.10
GAAB 96	See page D–26 of the MOA Benchmark Book	313.83

BASIS OF THIS DATUM GAAB 1972 ADJUST

VERTICAL DATUM

REV	DATE	DESCRIPTION	BY

REVISIONS

CRW ENGINEERING GROUP, LLC
3940 ARCTIC BLVD. SUITE 300
ANCHORAGE, ALASKA 99503
PHONE: (907) 562–3252
#AECL882–AK

CONSULTANT

STATE OF ALASKA 49TH
Justin T. Keene
CE-11775
REGISTERED PROFESSIONAL ENGINEER

SEAL

MUNICIPALITY OF ANCHORAGE

PROJECT MANAGEMENT AND ENGINEERING DEPARTMENT

14–50 IMAGE DRIVE / REFLECTION DRIVE AREA ROAD RECONSTRUCTION – PHASE 2 SCHED A

ROADWAY DETAILS

CURB RAMPS

SCALE HOR. N/A VER. N/A | GRID SW1638, SW1738 | DATE SEPT 2019 | STATUS 65% | SHEET D1 of D6

File: J:\JobsData\10133.00 Image Reflection Area Reconstruction\00 CADD\01 Working Set\01 Civil\Phase 2\10133.00 Details – Roadway – Phase 2.dwg

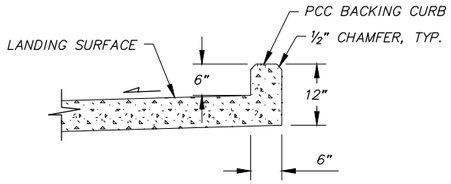

MONOLITHIC

BACKING CURB DETAIL NOTES:

1. THE TOP OF BACKING CURB SHALL TRANSITION BACK TO TOP OF SIDEWALK AT TOP RAMP SECTION OF CURB RAMP.

1 BACKING CURB DETAIL

SCALE: NTS

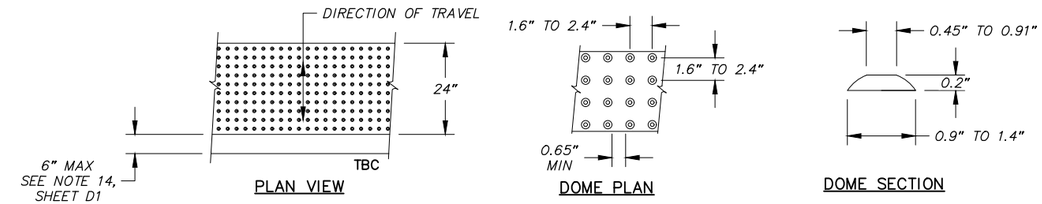

2 DETECTABLE WARNING PANEL

SCALE: NTS

SHEET DRIVEWAY NOTES:

1. ALL SLOPES ARE IN REFERENCE TO THE HORIZONTAL.
2. PAYMENT FOR PCC CURB & GUTTER (ALL TYPES) AND TRANSITION C&G SHALL BE PAID UNDER THE BID ITEM "PCC CURB & GUTTER (ALL TYPES)" AND NO SEPARATE PAYMENT SHALL BE MADE.
3. CENTER THE PROPOSED DRIVEWAY ENTRANCES ON DRIVEWAY CENTERLINE REFERENCE POINT AS SHOWN IN THE 20.28 RECONSTRUCT DRIVEWAY SUMMARY TABLES PROVIDED ON THE ROADWAY SUMMARY TABLE "T" SHEETS.
4. INCREASE SIDEWALK THICKNESS TO 6" ACROSS ALL DRIVEWAYS AND IN BETWEEN DRIVEWAYS THAT ARE WITHIN 5 FEET OF ADJACENT DRIVEWAYS & INSTALL WELDED WIRE MESH PER THE SPECIFICATIONS.
5. SEE 20.28 DRIVEWAY RECONSTRUCTION SUMMARY TABLES ON THE ROADWAY SUMMARY TABLE "T" AND DRIVEWAY RECONSTRUCTION DETAILS, FOR INDIVIDUAL DRIVEWAY SPECIFICS.

SHEET DRIVEWAY LEGEND:

- LIMITS OF 2" AC PAVING (CLASS E) FOR DRIVEWAY
- LIMITS OF PCC SIDEWALK (6" THICK, STANDARD FINISH), SEE NOTE 4

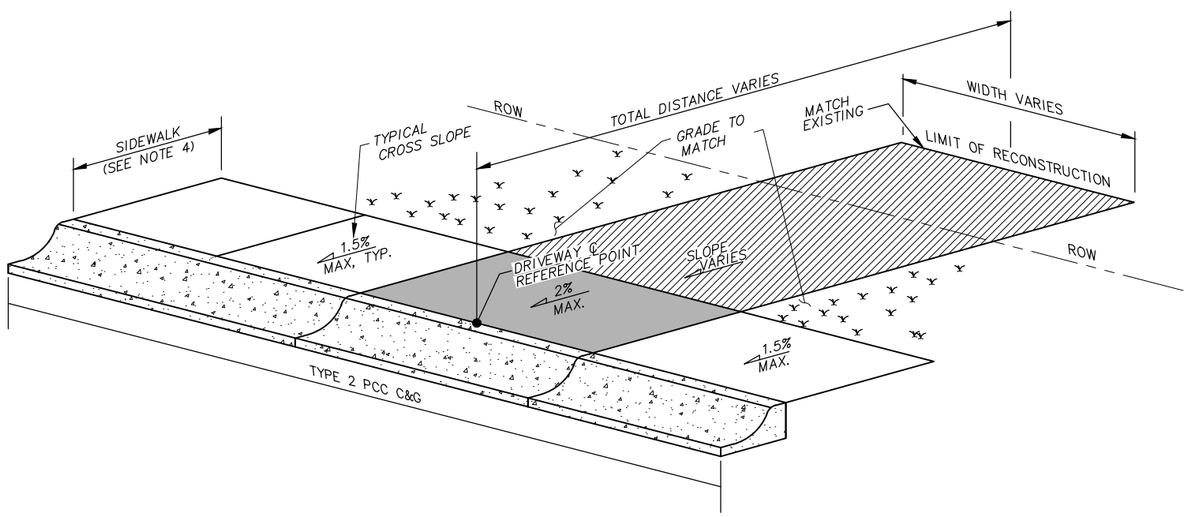

3 TYPICAL DRIVEWAY WITH ATTACHED SIDEWALK

SCALE: NTS

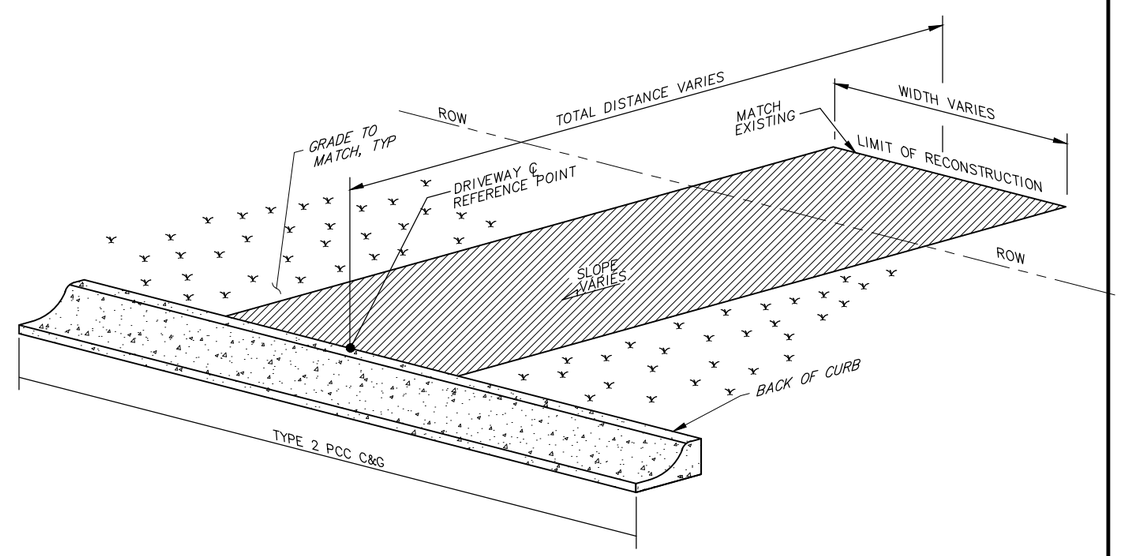

4 TYPICAL DRIVEWAY WITH NO SIDEWALK

SCALE: NTS

RECORD DRAWING

1. DATA PROVIDED BY: _____ TITLE: _____
   THIS WILL SERVE TO CERTIFY THAT THESE RECORD DRAWINGS ARE A TRUE AND ACCURATE REPRESENTATION OF THE PROJECT AS CONSTRUCTED.
   CONTRACTOR: _____
   BY: _____ TITLE: _____ DATE: _____
2. DATA TRANSFERRED BY: _____ TITLE: _____
   COMPANY: _____ DATE: _____
3. BASED ON PERIODIC FIELD OBSERVATIONS BY THE ENGINEER (OR AN INDIVIDUAL UNDER HIS/HER DIRECT SUPERVISION), THE CONTRACTOR-PROVIDED DATA APPEARS TO REPRESENT THE PROJECT AS CONSTRUCTED.
   DATA TRANSFER CHECKED BY: _____ TITLE: _____
   COMPANY: _____ DATE: _____
   BY: _____

PLAN CHECK

DATA	DRAWN BY	CHECKED BY
BASE	TS	MJ
TOPOGRAPHY	TS	MJ
PROFILE	RB	JK
STORM SEWER	JH	JK
WATER/SANITARY SEWER	MV	JK
GAS	MV	JK
TELEPHONE	MV	JK
ELECTRIC	TK	BM
DESIGN	RB	JK
QUANTITIES	RB	JK
PRELIMINARY/FINAL	RB	JK
MUNICIPAL/STATE	RB	JK

CONSTRUCTION RECORD

FIELD BOOKS
DESIGN CRW Books 147, 148, & 151
STAKING
ASBUILT
CONTRACTOR
INSPECTOR

VERTICAL DATUM

BM NO.	LOCATION	ELEV.
GAAB 66	See page D-24 of the MOA Benchmark Book	238.10
GAAB 96	See page D-26 of the MOA Benchmark Book	313.83

BASIS OF THIS DATUM GAAB 1972 ADJUST

REVISIONS

REV	DATE	DESCRIPTION	BY

CRW ENGINEERING GROUP, LLC
3940 ARCTIC BLVD. SUITE 300
ANCHORAGE, ALASKA 99503
PHONE: (907) 562-3252
#ECL882-AK

CONSULTANT

STATE OF ALASKA 49TH Justin T. Keene CE-11775 REGISTERED PROFESSIONAL ENGINEER

SEAL

MUNICIPALITY OF ANCHORAGE

PROJECT MANAGEMENT AND ENGINEERING DEPARTMENT

14-50 IMAGE DRIVE / REFLECTION DRIVE AREA ROAD RECONSTRUCTION – PHASE 2 SCHED A

ROADWAY DETAILS

CURB RAMP & DRIVEWAYS

SCALE HOR. N/A VER. N/A | GRID SW1638, SW1738 | DATE SEPT 2019 | STATUS 65% | SHEET D2 of D6

File:s:\JobsData\10133.00 Image Reflection Area Reconstruction\00 CADD\01 Working Set\01 Civil\Phase 2\10133.00 Details - Roadway - Phase 2.dwg

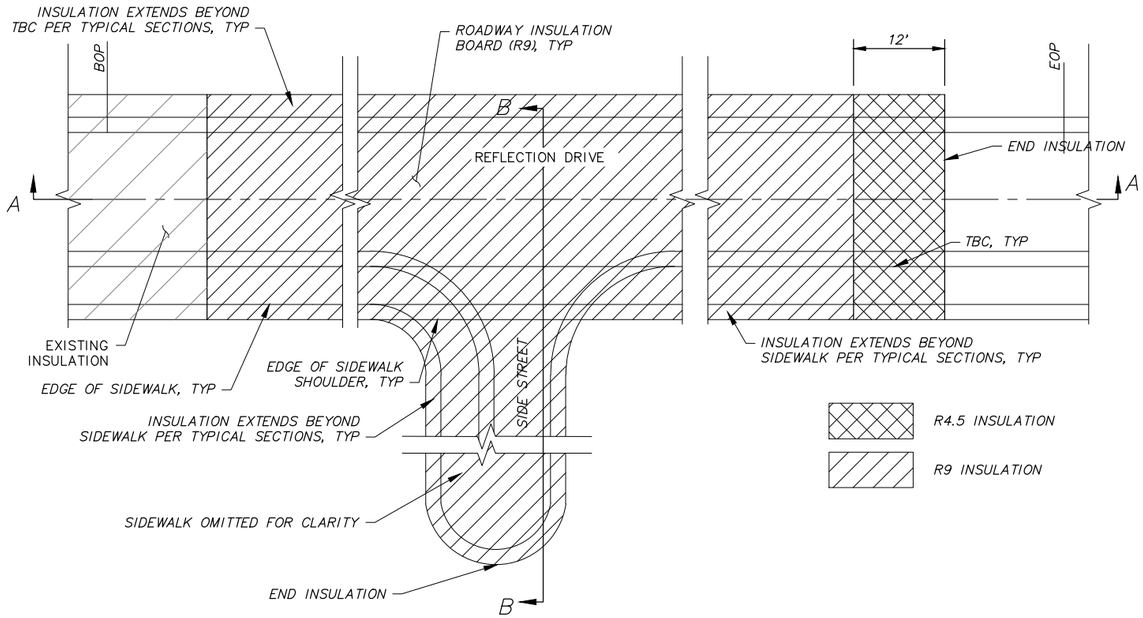

PLAN

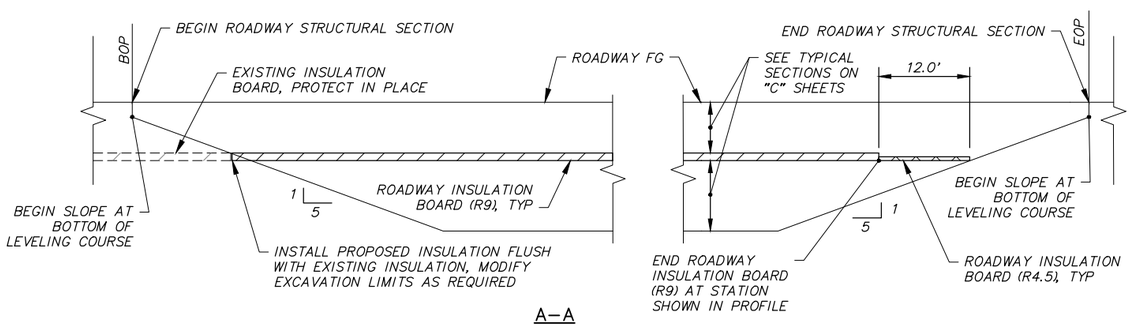

A–A

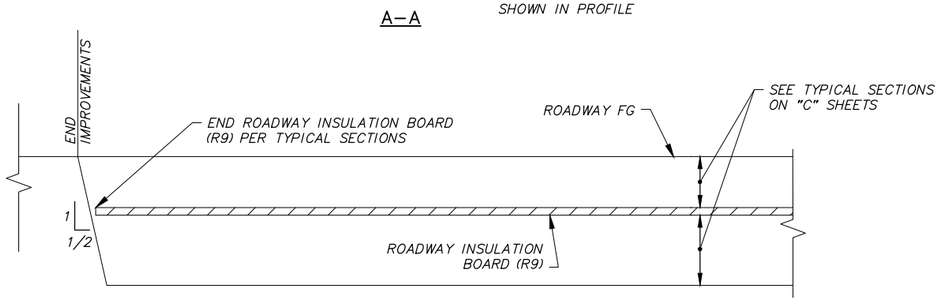

B–B

1 BOARD INSULATION AND EXCAVATION DETAIL

SCALE: NTS

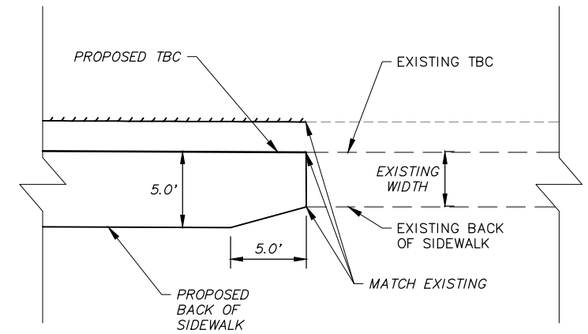

2 SIDEWALK TRANSITION DETAIL

SCALE: NTS

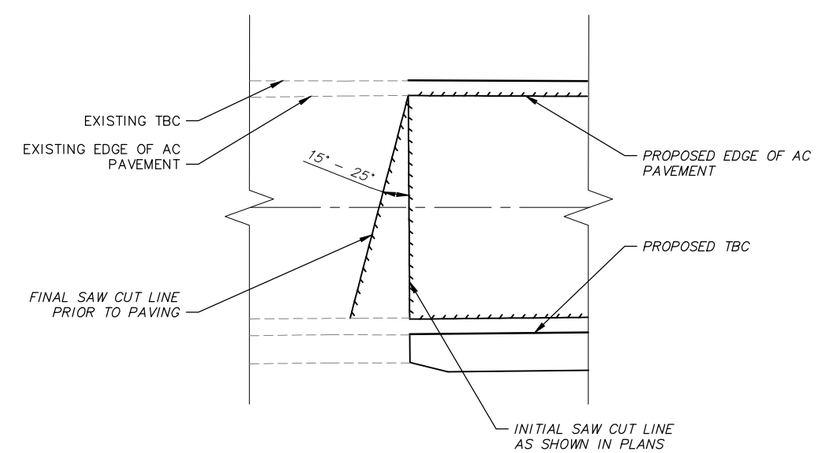

3 TRANSVERSE SAW CUT JOINT DETAIL

SCALE: NTS

RECORD DRAWING

1. DATA PROVIDED BY: _____ TITLE: _____

THIS WILL SERVE TO CERTIFY THAT THESE RECORD DRAWINGS ARE A TRUE AND ACCURATE REPRESENTATION OF THE PROJECT AS CONSTRUCTED.

CONTRACTOR: _____

BY: _____ TITLE: _____ DATE: _____

2. DATA TRANSFERRED BY: _____ TITLE: _____

COMPANY: _____ DATE: _____

3. BASED ON PERIODIC FIELD OBSERVATIONS BY THE ENGINEER (OR AN INDIVIDUAL UNDER HIS/HER DIRECT SUPERVISION), THE CONTRACTOR–PROVIDED DATA APPEARS TO REPRESENT THE PROJECT AS CONSTRUCTED.

DATA TRANSFER CHECKED BY: _____ TITLE: _____

COMPANY: _____ DATE: _____

BY: _____

DATA	DRAWN BY	CHECKED BY
BASE	TS	MJ
TOPOGRAPHY	TS	MJ
PROFILE	RB	JK
STORM SEWER	JH	JK
WATER/SANITARY SEWER	MV	JK
GAS	MV	JK
TELEPHONE	MV	JK
ELECTRIC	TK	BM
DESIGN	RB	JK
QUANTITIES	RB	JK
PRELIMINARY/FINAL	RB	JK
MUNICIPAL/STATE	RB	JK

PLAN CHECK

FIELD BOOKS	BM NO.	LOCATION	ELEV.
DESIGN CRW Books 147, 148, & 151	GAAB 66	See page D–24 of the MOA Benchmark Book	238.10
	GAAB 96	See page D–26 of the MOA Benchmark Book	313.83
STAKING			
ASBUILT			
CONTRACTOR	BASIS OF THIS DATUM GAAB 1972 ADJUST		
INSPECTOR			

CONSTRUCTION RECORD — VERTICAL DATUM

REV	DATE	DESCRIPTION	BY

REVISIONS

CRW ENGINEERING GROUP, LLC
3940 ARCTIC BLVD. SUITE 300
ANCHORAGE, ALASKA 99503
PHONE: (907) 562–3252
#AECL882–AK

CONSULTANT

STATE OF ALASKA 49 TH
Justin T. Keene
CE-11775
REGISTERED PROFESSIONAL ENGINEER

SEAL

MUNICIPALITY OF ANCHORAGE

PROJECT MANAGEMENT AND ENGINEERING DEPARTMENT

14–50 IMAGE DRIVE / REFLECTION DRIVE AREA ROAD RECONSTRUCTION – PHASE 2 SCHED A

ROADWAY DETAILS

MISCELLANEOUS DETAILS

SCALE HOR. N/A VER. N/A | GRID SW1638, SW1738 | DATE SEPT 2019 | STATUS 65% | SHEET D3 of D6

File: J:\JobsData\10133.00 Image Reflection Area Reconstruction\00 CADD\01 Working Set\01 Civil\Phase 2\10133.00 Details – Roadway – Phase 2.dwg

PCC CLUSTER MAILBOX BASE NOTES:

1. SEE "RELOCATE CLUSTER MAILBOX UNIT" TABLE, DEMOLITION SHEETS & ROADWAY SHEETS FOR LOCATING MAILBOXES ALONG ROADWAY. LOCATIONS ARE APPROXIMATE, VERIFY LOCATION WITH ENGINEER PRIOR TO INSTALLATION.
2. INSTALL TYPE 2A ACCESSIBLE CURB & GUTTER ALONG LENGTH OF PCC CLUSTER MAILBOX BASE. TRANSITION TO TYPE 2 CURB AND GUTTER OVER 4 FEET.

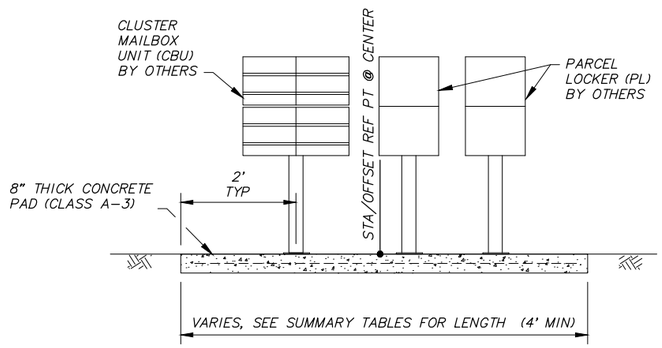

FRONT VIEW

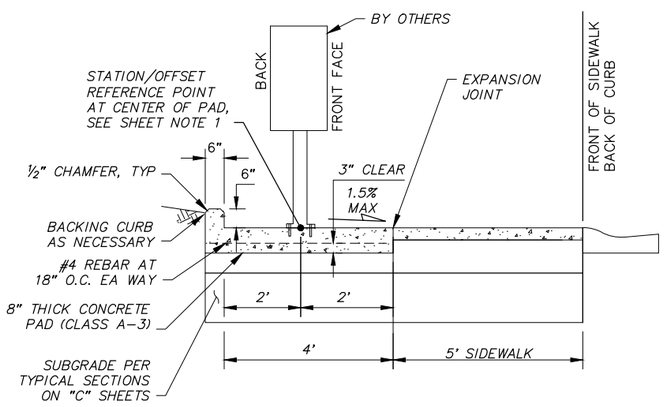

SIDE VIEW

1 PCC CLUSTER MAILBOX BASE WITH ATTACHED SIDEWALK DETAIL

SCALE: NTS

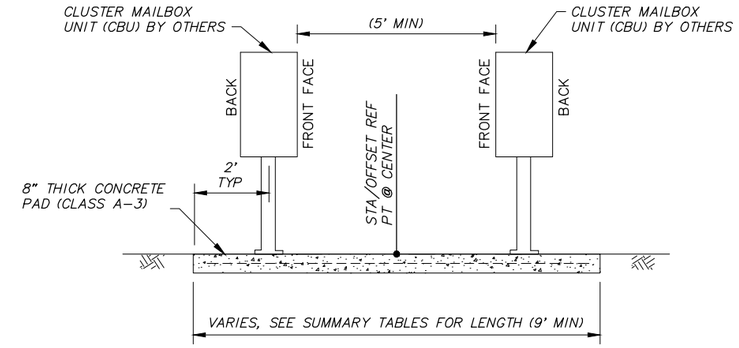

FRONT VIEW

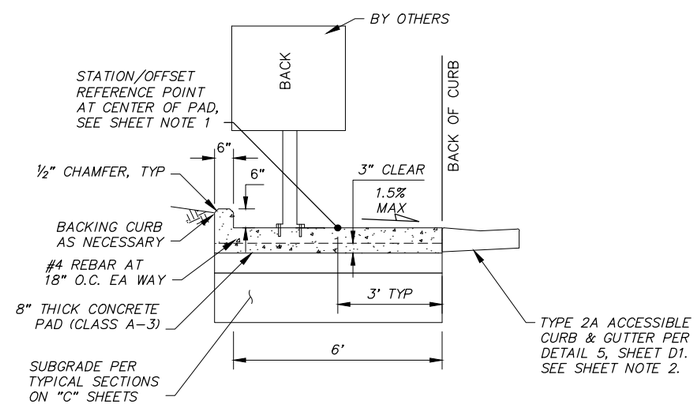

SIDE VIEW

2 PCC CLUSTER MAILBOX BASE WITH NO SIDEWALK DETAIL

SCALE: NTS

RECORD DRAWING

1. DATA PROVIDED BY: _____ TITLE: _____
   THIS WILL SERVE TO CERTIFY THAT THESE RECORD DRAWINGS ARE A TRUE AND ACCURATE REPRESENTATION OF THE PROJECT AS CONSTRUCTED.
   CONTRACTOR: _____
   BY: _____ TITLE: _____ DATE: _____
2. DATA TRANSFERRED BY: _____ TITLE: _____
   COMPANY: _____ DATE: _____
3. BASED ON PERIODIC FIELD OBSERVATIONS BY THE ENGINEER (OR AN INDIVIDUAL UNDER HIS/HER DIRECT SUPERVISION), THE CONTRACTOR-PROVIDED DATA APPEARS TO REPRESENT THE PROJECT AS CONSTRUCTED.
   DATA TRANSFER CHECKED BY: _____ TITLE: _____
   COMPANY: _____ DATE: _____
   BY: _____

DATA	DRAWN BY	CHECKED BY
BASE	TS	MJ
TOPOGRAPHY	TS	MJ
PROFILE	RB	JK
STORM SEWER	JH	JK
WATER/SANITARY SEWER	MV	JK
GAS	MV	JK
TELEPHONE	MV	JK
ELECTRIC	TK	BM
DESIGN	RB	JK
QUANTITIES	RB	JK
PRELIMINARY/FINAL	RB	JK
MUNICIPAL/STATE	RB	JK
PLAN CHECK		

FIELD BOOKS
DESIGN CRW Books 147, 148, & 151
STAKING
ASBUILT
CONTRACTOR
INSPECTOR
CONSTRUCTION RECORD

BM NO.	LOCATION	ELEV.
GAAB 66	See page D-24 of the MOA Benchmark Book	238.10
GAAB 96	See page D-26 of the MOA Benchmark Book	313.83
BASIS OF THIS DATUM GAAB 1972 ADJUST		
VERTICAL DATUM		

REV	DATE	DESCRIPTION	BY
REVISIONS			

CRW ENGINEERING GROUP, LLC
3940 ARCTIC BLVD. SUITE 300
ANCHORAGE, ALASKA 99503
PHONE: (907) 562-3252
#AECL882-AK
CONSULTANT

STATE OF ALASKA 49TH
Justin T. Keene
CE-11775
REGISTERED PROFESSIONAL ENGINEER
SEAL

MUNICIPALITY OF ANCHORAGE

PROJECT MANAGEMENT AND ENGINEERING DEPARTMENT

14-50 IMAGE DRIVE / REFLECTION DRIVE AREA ROAD RECONSTRUCTION - PHASE 2 SCHED A

ROADWAY DETAILS

PCC CLUSTER MAILBOX BASE DETAILS

SCALE HOR. N/A VER. N/A | GRID SW1638, SW1738 | DATE SEPT 2019 | STATUS 65% | SHEET D4 of D6

File: J:\JobsData\10133.00 Image Reflection Area Reconstruction\00 CADD\01 Working Set\01 Civil\Phase 2\10133.00 Details - Roadway - Phase 2.dwg

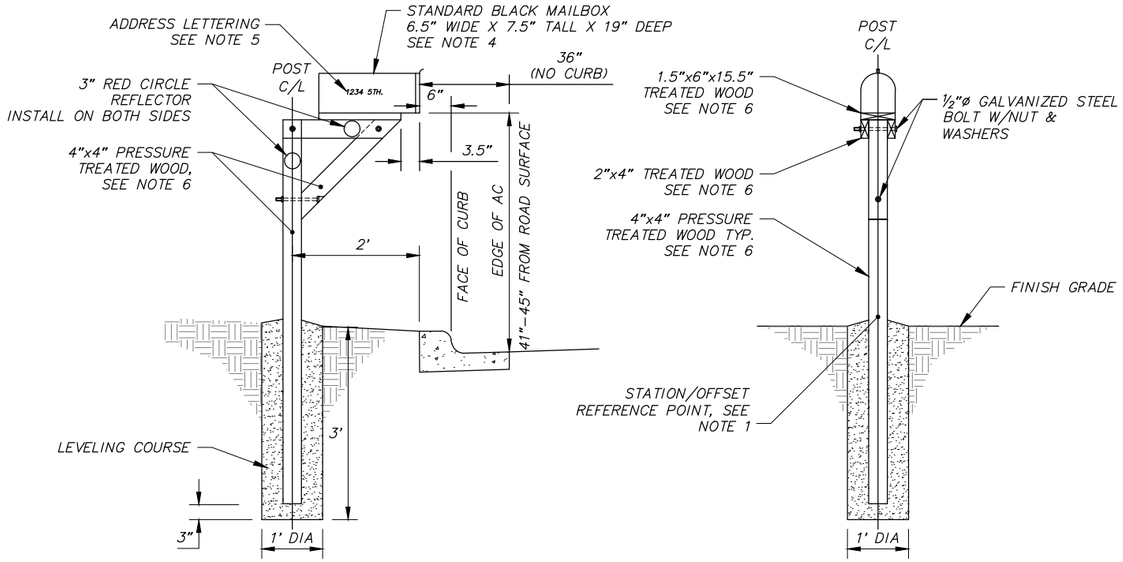

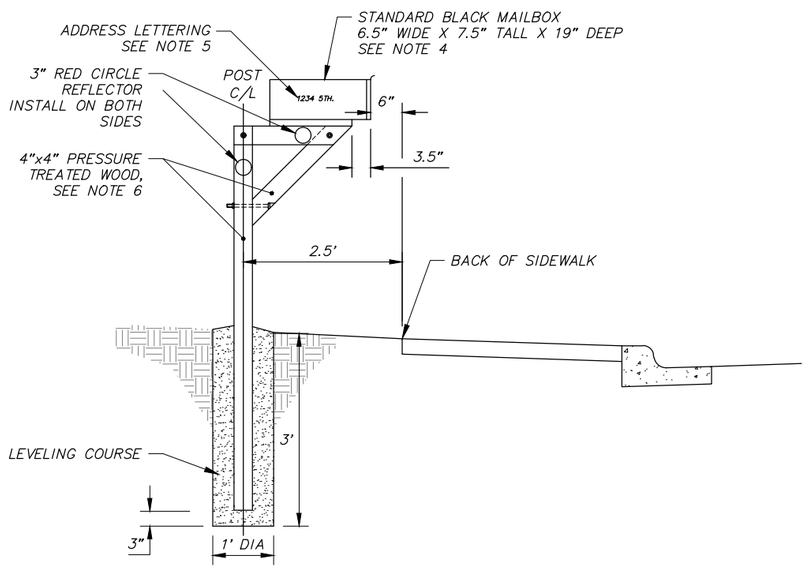

FOR MAILBOX LOCATIONS BEHIND
SIDEWALK AS SHOWN ON THE PLANS

TYPICAL WOOD POST MAILBOX INSTALLATION

1

SCALE: NTS

SHEET MAILBOX NOTES:

1. SEE "RELOCATE MAILBOX" TABLE, DEMOLITION SHEETS & ROADWAY SHEETS FOR LOCATING MAILBOXES ALONG ROADWAY. LOCATIONS ARE APPROXIMATE, VERIFY LOCATION WITH ENGINEER PRIOR TO INSTALLATION.
2. MAILBOXES AND SUPPORTS SHALL CONFORM WITH U.S. POSTAL SERVICE REGULATIONS.
3. NEWSPAPER RECEPTACLES SHALL CONFORM TO THE SAME SETBACK AND SUPPORT REGULATIONS AS MAILBOXES. WHERE NEWSPAPER RECEPTACLES AND MAILBOXES ARE TO BE MOUNTED TOGETHER, THE NEWSPAPER RECEPTACLE SHALL BE MOUNTED BELOW THE BOTTOM SURFACE OF THE MAILBOX.
4. CONTRACTOR SHALL COORDINATE WITH THE MOA AND ENGINEER IN THE FIELD REGARDING MAILBOX SUBSTITUTIONS OR MAILBOX SIZING, PRIOR TO ORDERING MATERIALS.
5. CONTRACTOR SHALL INSTALL MAILBOX ADDRESS LABELS TO MATCH EXISTING LABELS. ADDRESS LABELS SHALL BE A MINIMUM OF 1" IN HEIGHT AND INSTALLED ON THE SIDE OF THE MAILBOX VISIBLE FROM ON COMING TRAFFIC. ADDRESS LABELS SHOULD BE CENTERED BOTH VERTICAL AND HORIZONTAL ON MAILBOX.
6. ALL WOOD SHALL BE ALL WEATHER WOOD SEALED WITH A SEMI-TRANSPARENT OIL BASED STAIN BROWN IN COLOR. SUBMIT COLOR SAMPLE FOR APPROVAL.

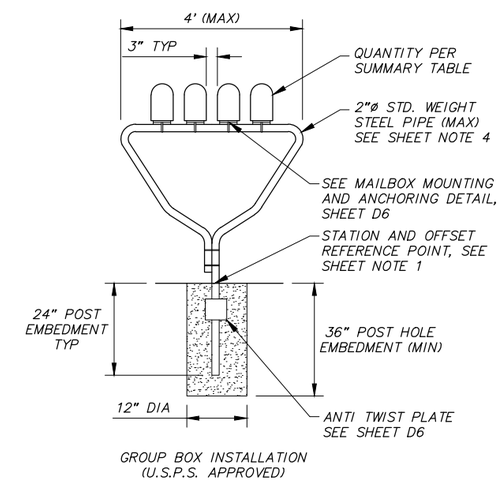

GROUP BOX INSTALLATION
(U.S.P.S. APPROVED)

TYPICAL GROUP METAL POST MAILBOX INSTALLATION NOTES:

1. INSTALL THE GROUP METAL POST MAILBOXES IN SAME LOCATION FROM CURB & GUTTER, SIDEWALK AND PAVEMENT AS SHOWN IN DETAIL 1, THIS SHEET.

TYPICAL GROUP METAL POST MAILBOX INSTALLATION

2

SCALE: NTS

RECORD DRAWING

1. DATA PROVIDED BY: _____ TITLE: _____
   THIS WILL SERVE TO CERTIFY THAT THESE RECORD DRAWINGS ARE A TRUE AND ACCURATE REPRESENTATION OF THE PROJECT AS CONSTRUCTED.
   CONTRACTOR: _____
   BY: _____ TITLE: _____ DATE: _____
2. DATA TRANSFERRED BY: _____ TITLE: _____
   COMPANY: _____ DATE: _____
3. BASED ON PERIODIC FIELD OBSERVATIONS BY THE ENGINEER (OR AN INDIVIDUAL UNDER HIS/HER DIRECT SUPERVISION), THE CONTRACTOR-PROVIDED DATA APPEARS TO REPRESENT THE PROJECT AS CONSTRUCTED.
   DATA TRANSFER CHECKED BY: _____ TITLE: _____
   COMPANY: _____ DATE: _____
   BY: _____

DATA	DRAWN BY	CHECKED BY
BASE	TS	MJ
TOPOGRAPHY	TS	MJ
PROFILE	RB	JK
STORM SEWER	JH	JK
WATER/SANITARY SEWER	MV	JK
GAS	MV	JK
TELEPHONE	MV	JK
ELECTRIC	TK	BM
DESIGN	RB	JK
QUANTITIES	RB	JK
PRELIMINARY/FINAL	RB	JK
MUNICIPAL/STATE	RB	JK

PLAN CHECK

FIELD BOOKS
DESIGN CRW Books 147, 148, & 151
STAKING
ASBUILT
CONTRACTOR
INSPECTOR

CONSTRUCTION RECORD

BM NO.	LOCATION	ELEV.
GAAB 66	See page D-24 of the MOA Benchmark Book	238.10
GAAB 96	See page D-26 of the MOA Benchmark Book	313.83

BASIS OF THIS DATUM GAAB 1972 ADJUST

VERTICAL DATUM

REV	DATE	DESCRIPTION	BY

REVISIONS

CRW ENGINEERING GROUP, LLC
3940 ARCTIC BLVD. SUITE 300
ANCHORAGE, ALASKA 99503
PHONE: (907) 562-3252
#ACL882-AK

CONSULTANT

STATE OF ALASKA 49TH Justin T. Keene CE-11775 REGISTERED PROFESSIONAL ENGINEER

SEAL

MUNICIPALITY OF ANCHORAGE

PROJECT MANAGEMENT AND ENGINEERING DEPARTMENT

14-50 IMAGE DRIVE / REFLECTION DRIVE AREA ROAD RECONSTRUCTION - PHASE 2 SCHED A

ROADWAY DETAILS

MAILBOX DETAILS

SCALE HOR. N/A VER. N/A | GRID SW1638, SW1738 | DATE SEPT 2019 | STATUS 65% | SHEET D5 of D6

File: J:\JobsData\10133.00 Image Reflection Area Reconstruction\00 CADD\01 Working Set\01 Civil\Phase 2\10133.00 Details - Roadway - Phase 2.dwg

MAILBOX SUPPORT PLATFORM ASSEMBLY NOTE:
SECURE SUPPORT PLATFORM TO 4x4 WITH 5/16" GALVANIZED STEEL LAG BOLT, TYP OF 2.

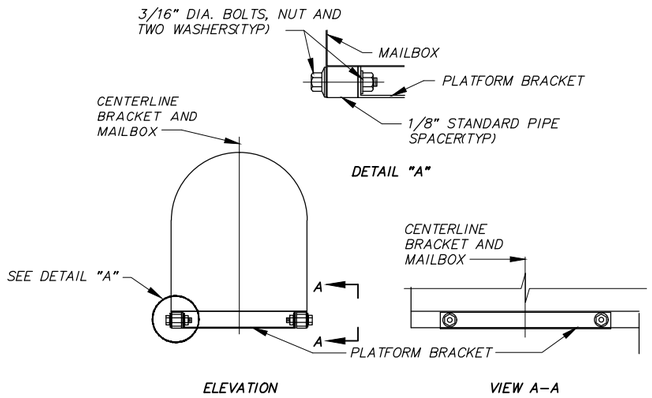

1 MAILBOX SUPPORT PLATFORM ASSEMBLY
SCALE: NTS

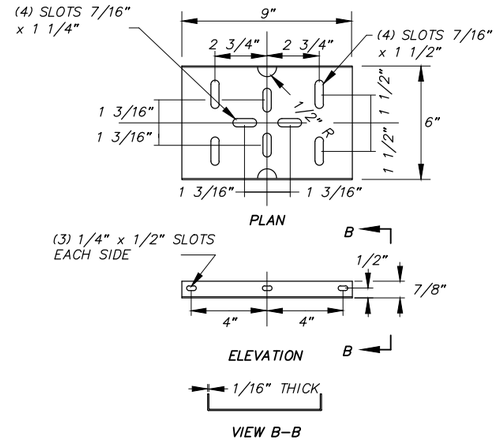

2 STEEL PLATFORM BRACKET
SCALE: NTS

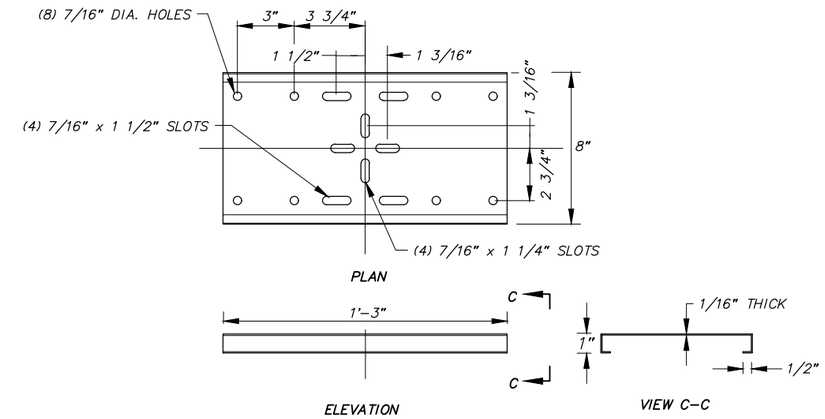

3 STEEL SHELF BRACKET
SCALE: NTS

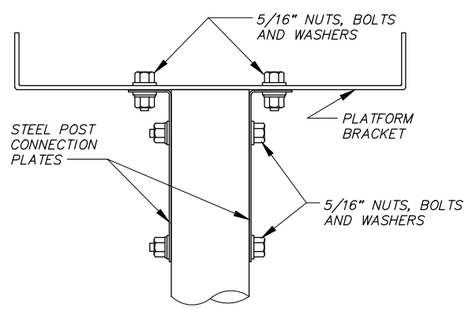

4 BRACKET ASSEMBLY DETAIL
SCALE: NTS

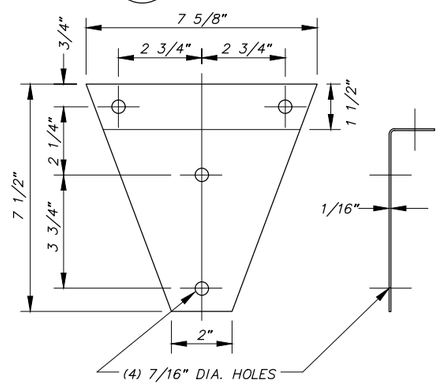

5 STEEL POST CONNECTION PLATES FOR STEEL PIPE POST
SCALE: NTS

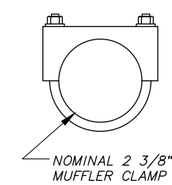

6 CLAMP
SCALE: NTS

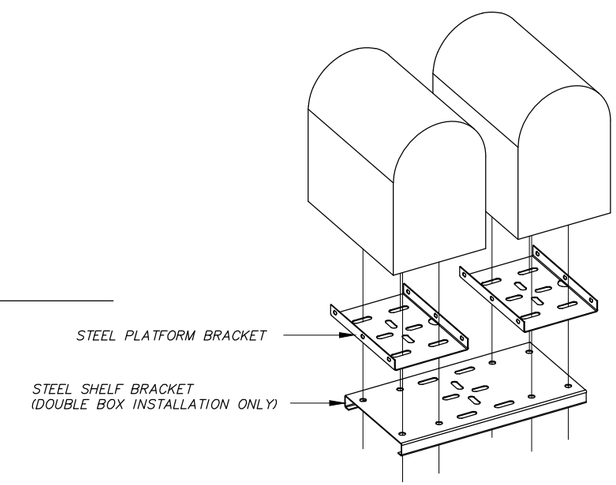

10 MAILBOX CONNECTION DETAIL
SCALE: NTS

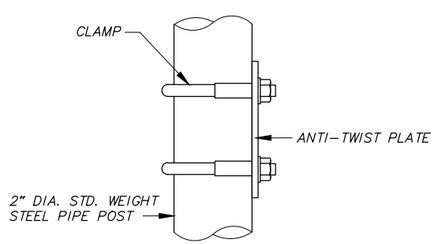

7 ANTI-TWIST PLATE ASSEMBLY DETAIL
SCALE: NTS

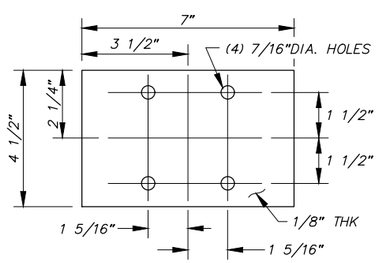

8 ANTI-TWIST PLATE FOR STEEL PIPE POST
SCALE: NTS

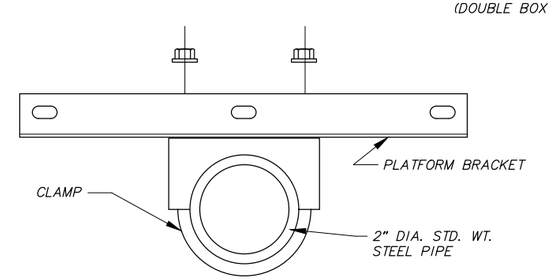

9 MULTIPLE BOX CLAMP ASSEMBLY DETAIL
SCALE: NTS

RECORD DRAWING

1. DATA PROVIDED BY: _____ TITLE: _____
   THIS WILL SERVE TO CERTIFY THAT THESE RECORD DRAWINGS ARE A TRUE AND ACCURATE REPRESENTATION OF THE PROJECT AS CONSTRUCTED.
   CONTRACTOR: _____
   BY: _____ TITLE: _____ DATE: _____
2. DATA TRANSFERRED BY: _____ TITLE: _____
   COMPANY: _____ DATE: _____
3. BASED ON PERIODIC FIELD OBSERVATIONS BY THE ENGINEER (OR AN INDIVIDUAL UNDER HIS/HER DIRECT SUPERVISION), THE CONTRACTOR–PROVIDED DATA APPEARS TO REPRESENT THE PROJECT AS CONSTRUCTED.
   DATA TRANSFER CHECKED BY: _____ TITLE: _____
   COMPANY: _____ DATE: _____
   BY: _____

DATA	DRAWN BY	CHECKED BY
BASE	TS	MJ
TOPOGRAPHY	TS	MJ
PROFILE	RB	JK
STORM SEWER	JH	JK
WATER/SANITARY SEWER	MV	JK
GAS	MV	JK
TELEPHONE	MV	JK
ELECTRIC	TK	BM
DESIGN	RB	JK
QUANTITIES	RB	JK
PRELIMINARY/FINAL	RB	JK
MUNICIPAL/STATE	RB	JK

PLAN CHECK

FIELD BOOKS	BM NO.	LOCATION	ELEV.
DESIGN CRW Books 147, 148, & 151	GAAB 66	See page D–24 of the MOA Benchmark Book	238.10
	GAAB 96	See page D–26 of the MOA Benchmark Book	313.83
STAKING			
ASBUILT			
CONTRACTOR	BASIS OF THIS DATUM GAAB 1972 ADJUST		
INSPECTOR			

CONSTRUCTION RECORD — VERTICAL DATUM

REV	DATE	DESCRIPTION	BY

REVISIONS

CRW ENGINEERING GROUP, LLC
3940 ARCTIC BLVD. SUITE 300
ANCHORAGE, ALASKA 99503
PHONE: (907) 562–3252
#ECL882–AK
CONSULTANT

STATE OF ALASKA 49 TH
Justin T. Keene
CE-11775
REGISTERED PROFESSIONAL ENGINEER
SEAL

MUNICIPALITY OF ANCHORAGE

PROJECT MANAGEMENT AND ENGINEERING DEPARTMENT

14–50 IMAGE DRIVE / REFLECTION DRIVE AREA ROAD RECONSTRUCTION – PHASE 2 SCHED A

ROADWAY DETAILS

MAILBOX DETAILS

SCALE HOR. N/A VER. N/A | GRID SW1638, SW1738 | DATE SEPT 2019 | STATUS 65% | SHEET D6 of D6

File: J:\JobsData\10133.00 Image Reflection Area Reconstruction\00 CADD\01 Working Set\01 Civil\Phase 2\10133.00 Details – Roadway – Phase 2.dwg

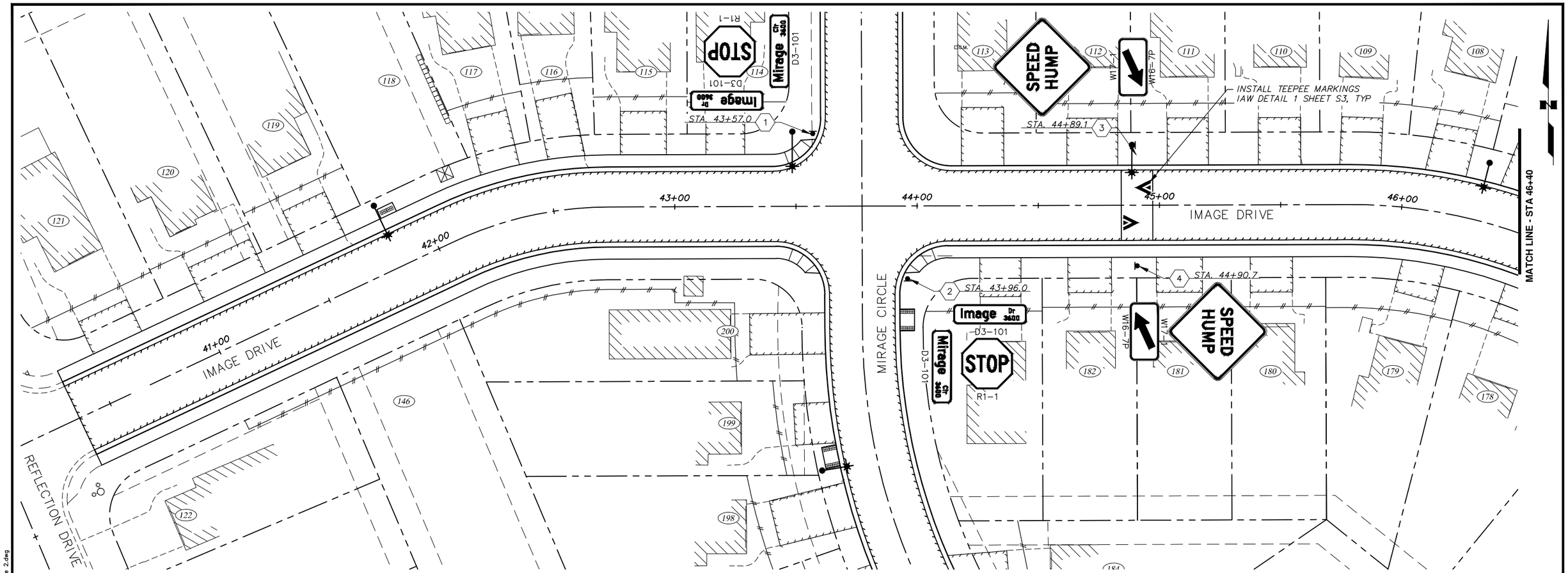

NOTE:

1. SEE SIGNING NOTES ON SHEET S4.

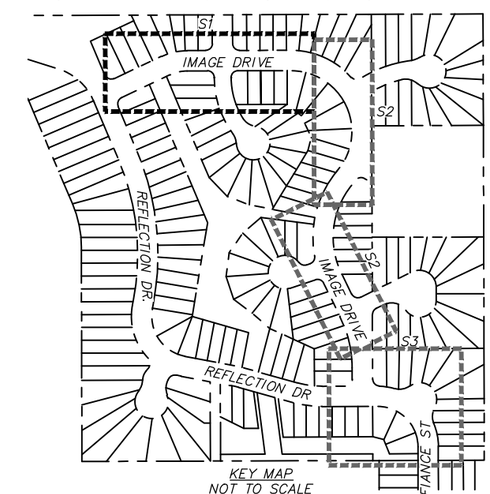

KEY MAP
NOT TO SCALE

RECORD DRAWING

1. DATA PROVIDED BY: _____ TITLE: _____
   THIS WILL SERVE TO CERTIFY THAT THESE RECORD DRAWINGS ARE A TRUE AND ACCURATE REPRESENTATION OF THE PROJECT AS CONSTRUCTED.
   CONTRACTOR: _____
   BY: _____ TITLE: _____ DATE: _____
2. DATA TRANSFERRED BY: _____ TITLE: _____
   COMPANY: _____ DATE: _____
3. BASED ON PERIODIC FIELD OBSERVATIONS BY THE ENGINEER (OR AN INDIVIDUAL UNDER HIS/HER DIRECT SUPERVISION), THE CONTRACTOR-PROVIDED DATA APPEARS TO REPRESENT THE PROJECT AS CONSTRUCTED.
   DATA TRANSFER CHECKED BY: _____ TITLE: _____
   COMPANY: _____ DATE: _____
   BY: _____

DATA	DRAWN BY	CHECKED BY
BASE	TS	MJ
TOPOGRAPHY	TS	MJ
PROFILE	RB	JK
STORM SEWER	JH	JK
WATER/SANITARY SEWER	MV	JK
GAS	MV	JK
TELEPHONE	MV	JK
ELECTRIC	TK	BM
DESIGN	RB	JK
QUANTITIES	RB	JK
PRELIMINARY/FINAL	RB	JK
MUNICIPAL/STATE	RB	JK

PLAN CHECK

GRAPHIC 40 20 0 20 40 SCALE

FIELD BOOKS	BM NO.	LOCATION	ELEV.
DESIGN CRW Books 147, 148, & 151	GAAB 66	See page D-24 of the MOA Benchmark Book	238.10
	GAAB 96	See page D-26 of the MOA Benchmark Book	313.83
STAKING			
ASBUILT			
CONTRACTOR	BASIS OF THIS DATUM GAAB 1972 ADJUST		
INSPECTOR			

CONSTRUCTION RECORD — VERTICAL DATUM

REV	DATE	DESCRIPTION	BY

REVISIONS

CRW ENGINEERING GROUP, LLC
3940 ARCTIC BLVD. SUITE 300
ANCHORAGE, ALASKA 99503
PHONE: (907) 562-3252
#ECL882-AK

CONSULTANT

STATE OF ALASKA 49 TH
Robert W. Burdick
CE-123959
REGISTERED PROFESSIONAL ENGINEER

SEAL

MUNICIPALITY OF ANCHORAGE

PROJECT MANAGEMENT AND ENGINEERING DEPARTMENT

14-50 IMAGE DRIVE / REFLECTION DRIVE AREA ROAD RECONSTRUCTION - PHASE 2 SCHED A

SIGNING & STRIPING

IMAGE DRIVE - STA 40+00 TO 46+40

SCALE HOR. 1"=20' VER. N/A | GRID SW1638, SW1738 | DATE SEPT 2019 | STATUS 65% | SHEET S1 of S4

File:J:\JobsData\10133.00 Image Reflection Area Reconstruction\00 CADD\01 Working Set\01 Civil\Phase 2\10133.00 Signing & Striping - Phase 2.dwg

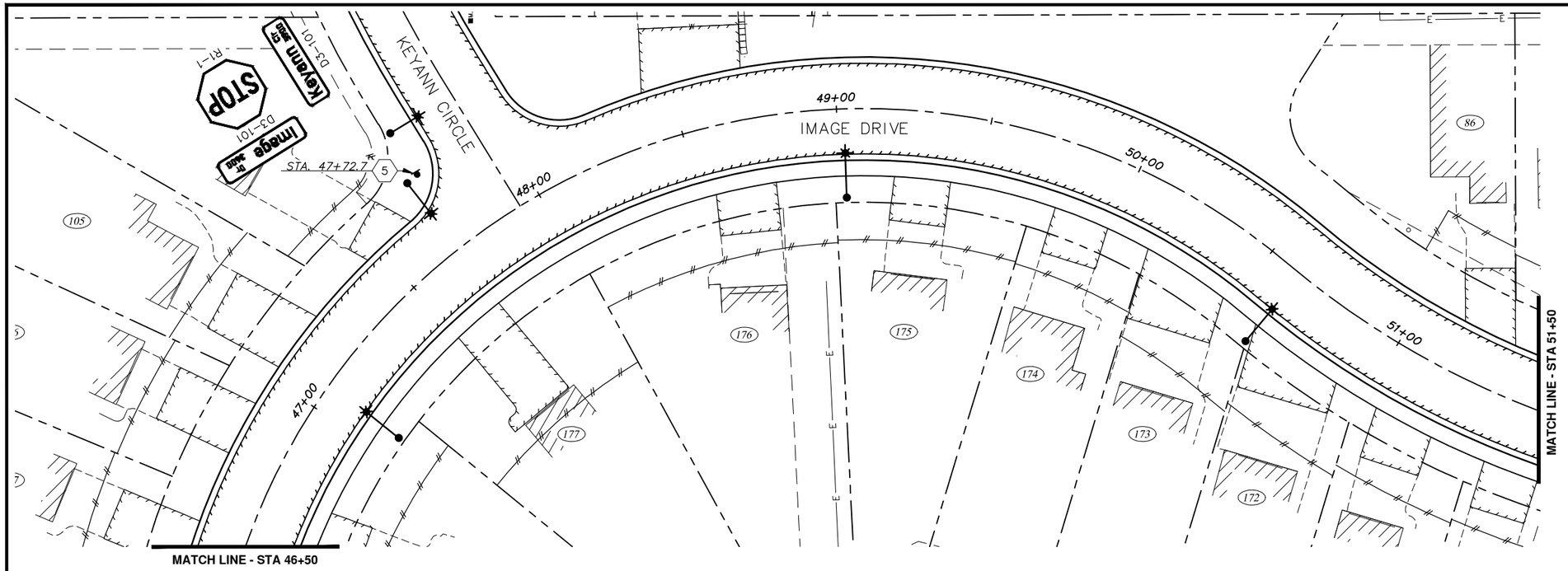

NOTE:

1. SEE SIGNING NOTES ON SHEET S4.

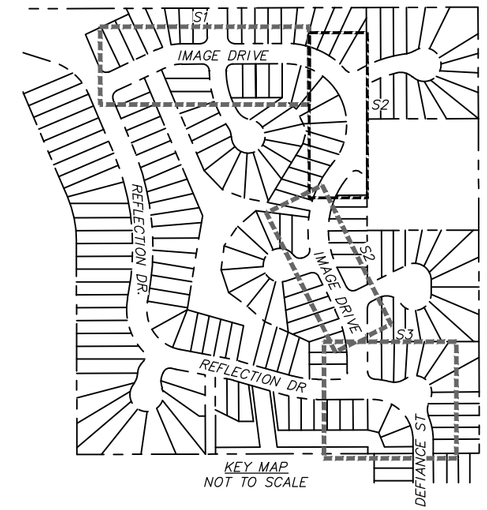

KEY MAP
NOT TO SCALE

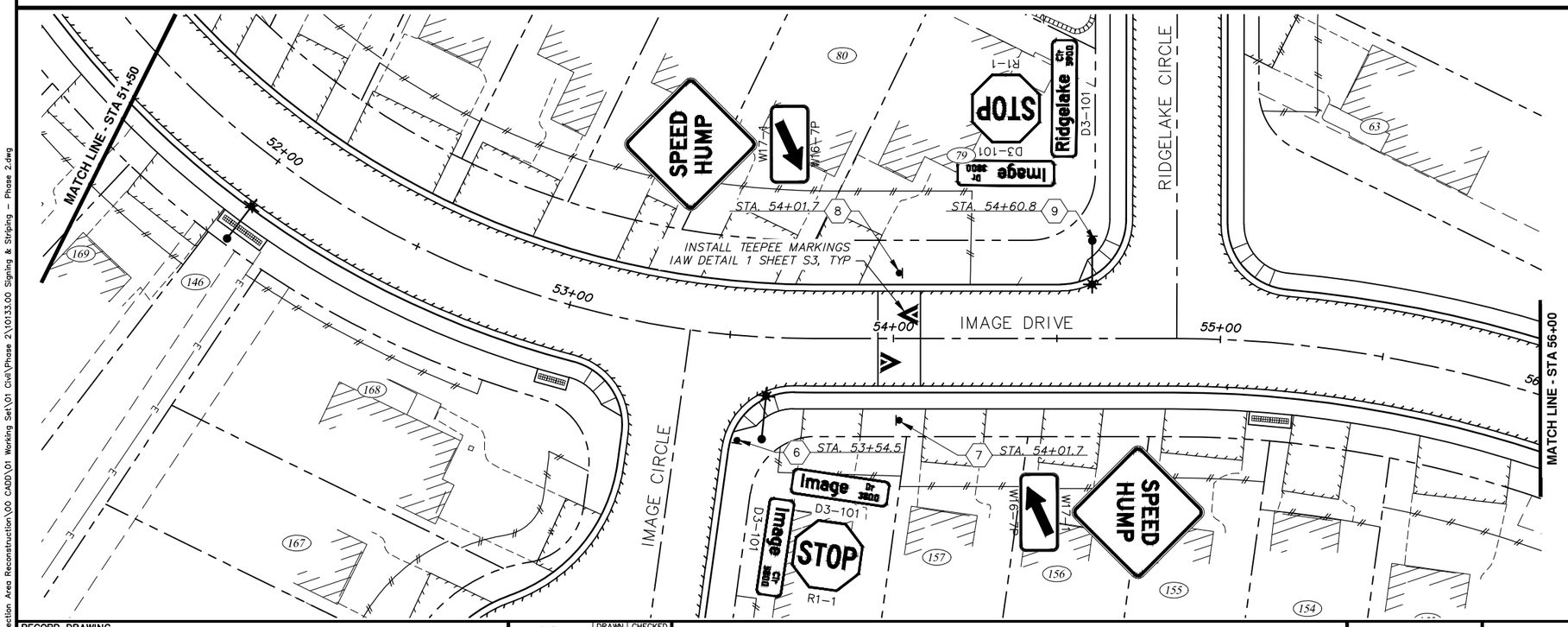

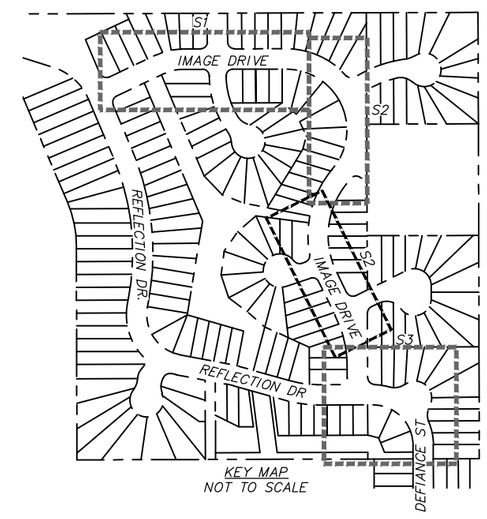

KEY MAP
NOT TO SCALE

RECORD DRAWING

1. DATA PROVIDED BY: _____ TITLE: _____
   THIS WILL SERVE TO CERTIFY THAT THESE RECORD DRAWINGS ARE A TRUE AND ACCURATE REPRESENTATION OF THE PROJECT AS CONSTRUCTED.
   CONTRACTOR: _____
   BY: _____ TITLE: _____ DATE: _____
2. DATA TRANSFERRED BY: _____ TITLE: _____
   COMPANY: _____ DATE: _____
3. BASED ON PERIODIC FIELD OBSERVATIONS BY THE ENGINEER (OR AN INDIVIDUAL UNDER HIS/HER DIRECT SUPERVISION), THE CONTRACTOR-PROVIDED DATA APPEARS TO REPRESENT THE PROJECT AS CONSTRUCTED.
   DATA TRANSFER CHECKED BY: _____ TITLE: _____
   COMPANY: _____ DATE: _____
   BY: _____

DATA	DRAWN BY	CHECKED BY
BASE	TS	MJ
TOPOGRAPHY	TS	MJ
PROFILE	RB	JK
STORM SEWER	JH	JK
WATER/SANITARY SEWER	MV	JK
GAS	MV	JK
TELEPHONE	MV	JK
ELECTRIC	TK	BM
DESIGN	RB	JK
QUANTITIES	RB	JK
PRELIMINARY/FINAL	RB	JK
MUNICIPAL/STATE	RB	JK

PLAN CHECK

GRAPHIC 40 20 0 20 40 SCALE

FIELD BOOKS	BM NO.	LOCATION	ELEV.
DESIGN CRW Books 147, 148, & 151	GAAB 66	See page D-24 of the MOA Benchmark Book	238.10
	GAAB 96	See page D-26 of the MOA Benchmark Book	313.83
STAKING			
AS-BUILT			
CONTRACTOR	BASIS OF THIS DATUM GAAB 1972 ADJUST		
INSPECTOR			

CONSTRUCTION RECORD — VERTICAL DATUM

REV	DATE	DESCRIPTION	BY

REVISIONS

CRW ENGINEERING GROUP, LLC
3940 ARCTIC BLVD. SUITE 300
ANCHORAGE, ALASKA 99503
PHONE: (907) 562-3252
#AECL882-AK

CONSULTANT

STATE OF ALASKA 49TH Robert W. Burdick CE-123959 REGISTERED PROFESSIONAL ENGINEER

SEAL

MUNICIPALITY OF ANCHORAGE

PROJECT MANAGEMENT AND ENGINEERING DEPARTMENT

14-50 IMAGE DRIVE / REFLECTION DRIVE AREA ROAD RECONSTRUCTION – PHASE 2 SCHED A

SIGNING & STRIPING

IMAGE DRIVE – STA 46+50 TO 56+00

SCALE HOR. 1"=20' VER. N/A | GRID SW1638, SW1738 | DATE SEPT 2019 | STATUS 65% | SHEET S2 of S4

File:J:\JobsDate\10133.00 Image Reflection Area Reconstruction\00 CADD\01 Working Set\01 Civil\Phase 2\10133.00 Signing & Striping - Phase 2.dwg

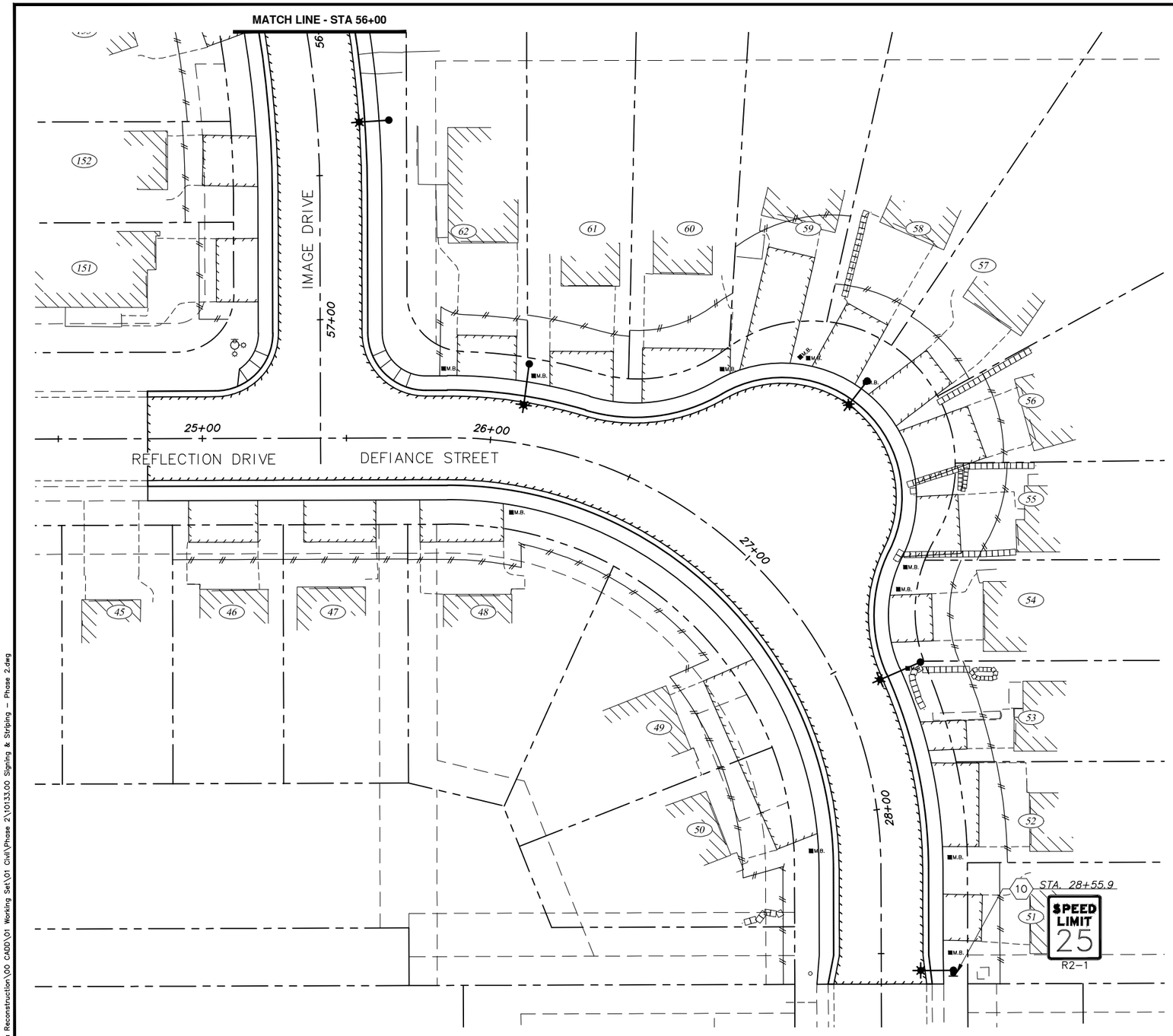

NOTE:

1. SEE SIGNING NOTES ON SHEET S4.

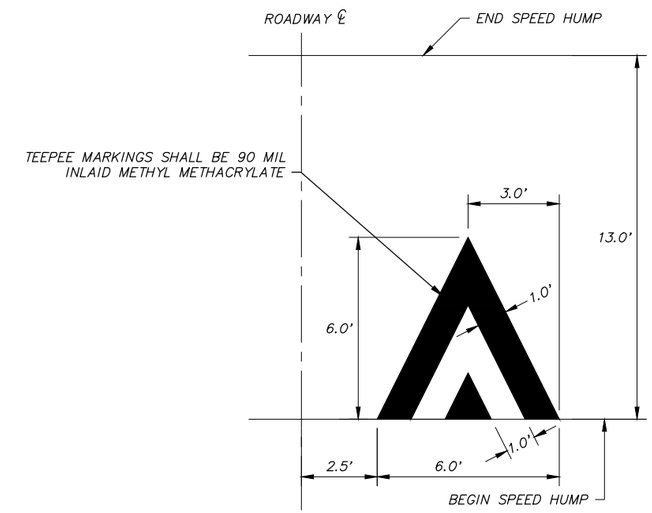

1 **TEEPEE MARKINGS FOR SPEED HUMPS**

SCALE: NTS

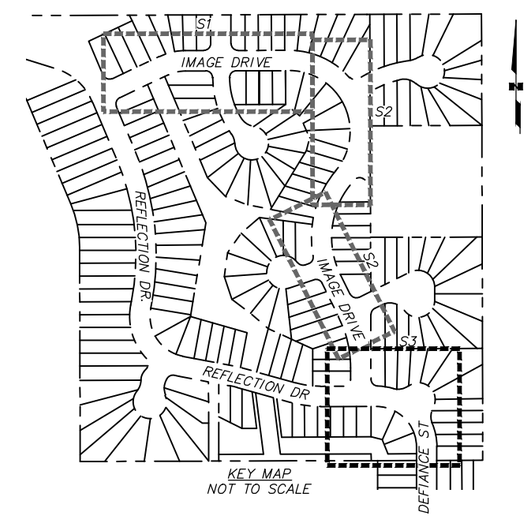

KEY MAP
NOT TO SCALE

RECORD DRAWING

1. DATA PROVIDED BY: _____ TITLE: _____
   THIS WILL SERVE TO CERTIFY THAT THESE RECORD DRAWINGS ARE A TRUE AND ACCURATE REPRESENTATION OF THE PROJECT AS CONSTRUCTED.
   CONTRACTOR: _____
   BY: _____ TITLE: _____ DATE: _____
2. DATA TRANSFERRED BY: _____ TITLE: _____
   COMPANY: _____ DATE: _____
3. BASED ON PERIODIC FIELD OBSERVATIONS BY THE ENGINEER (OR AN INDIVIDUAL UNDER HIS/HER DIRECT SUPERVISION), THE CONTRACTOR-PROVIDED DATA APPEARS TO REPRESENT THE PROJECT AS CONSTRUCTED.
   DATA TRANSFER CHECKED BY: _____ TITLE: _____
   COMPANY: _____ DATE: _____
   BY: _____

DATA	DRAWN BY	CHECKED BY
BASE	TS	MJ
TOPOGRAPHY	TS	MJ
PROFILE	RB	JK
STORM SEWER	JH	JK
WATER/SANITARY SEWER	MV	JK
GAS	MV	JK
TELEPHONE	MV	JK
ELECTRIC	TK	BM
DESIGN	RB	JK
QUANTITIES	RB	JK
PRELIMINARY/FINAL	RB	JK
MUNICIPAL/STATE	RB	JK

PLAN CHECK

GRAPHIC 40 20 0 20 40 SCALE

FIELD BOOKS	BM NO.	LOCATION	ELEV.
DESIGN CRW Books 147, 148, & 151	GAAB 66	See page D-24 of the MOA Benchmark Book	238.10
	GAAB 96	See page D-26 of the MOA Benchmark Book	313.83
STAKING			
ASBUILT			
CONTRACTOR	BASIS OF THIS DATUM GAAB 1972 ADJUST		
INSPECTOR			

CONSTRUCTION RECORD — VERTICAL DATUM

REV	DATE	DESCRIPTION	BY

REVISIONS

CRW ENGINEERING GROUP, LLC
3940 ARCTIC BLVD. SUITE 300
ANCHORAGE, ALASKA 99503
PHONE: (907) 562-3252
#AECL882-AK

CONSULTANT

STATE OF ALASKA 49TH Robert W. Burdick CE-123959 REGISTERED PROFESSIONAL ENGINEER

SEAL

MUNICIPALITY OF ANCHORAGE

PROJECT MANAGEMENT AND ENGINEERING DEPARTMENT

14-50 IMAGE DRIVE / REFLECTION DRIVE AREA ROAD RECONSTRUCTION – PHASE 2 SCHED A

SIGNING & STRIPING

REFLECTION DRIVE / DEFIANCE STREET STA 56+00 TO EOP

SCALE HOR. 1"=20' VER. N/A | GRID SW1638, SW1738 | DATE SEPT 2019 | STATUS 65% | SHEET S3 of S4

File:J:\JobsData\10133.00 Image Reflection Area Reconstruction\00 CADD\01 Working Set\01 Civil\Phase 2\10133.00 Signing & Striping - Phase 2.dwg

70.11

STANDARD SIGN

SHEET	POST NO.	STATION	OFFSET	TYPE	LEGEND	WIDTH (INCHES)	HEIGHT (INCHES)	AREA (SF)	SIGN FACES	SIGN POST	REMARKS
S1	1	43+57.0	30.0 LT	D3-101	IMAGE DR 3600	30	8	1.67	N/S	2.5" PST	ONE DOUBLE SIDED PANEL
				D3-101	MIRAGE CIR 3600	30	8	1.67	E/W		ONE DOUBLE SIDED PANEL
				R1-1	STOP	30	30	6.25	N		
	2	43+96.0	30.0 RT	D3-101	IMAGE DR 3600	30	8	1.67	N/S	2.5" PST	ONE DOUBLE SIDED PANEL
				D3-101	MIRAGE CIR 3600	30	8	1.67	E/W		ONE DOUBLE SIDED PANEL
				R1-1	STOP	30	30	6.25	S		
	3	44+89.1	24.8 LT	W17-1	SPEED HUMP	30	30	6.25	E	MOUNT ON LIGHT POLE	
				W16-7P	ARROW (LEFT)	24	12	2.00	E		
	4	44+90.7	25.0 RT	W17-1	SPEED HUMP	30	30	6.25	W	2.5" PST	
				W16-7P	ARROW (LEFT)	24	12	2.00	W		
S2	5	47+72.7	27.0 LT	D3-101	IMAGE DR 3600	30	8	1.67	NE/SW	2.5" PST	ONE DOUBLE SIDED PANEL
				D3-101	KEYANN CIR 5900	30	8	1.67	NW/SE		ONE DOUBLE SIDED PANEL
				R1-1	STOP	30	30	6.25	NE		
	6	53+54.5	32.0 RT	D3-101	IMAGE DR 3800	30	8	1.67	NE/SW	2.5" PST	ONE DOUBLE SIDED PANEL
				D3-101	IMAGE CIR 5800	30	8	1.67	NW/SE		ONE DOUBLE SIDED PANEL
				R1-1	STOP	30	30	6.25	SW		
	7	54+01.7	25.0 RT	W17-1	SPEED HUMP	30	30	6.25	NW	2.5" PST	
				W16-7P	ARROW (LEFT)	24	12	2.00	NW		
	8	54+01.7	20.0 LT	W17-1	SPEED HUMP	30	30	6.25	SE	2.5" PST	
				W16-7P	ARROW (LEFT)	24	12	2.00	SE		
	9	54+60.8	29.9 LT	D3-101	IMAGE DR 3800	30	8	1.67	NE/SW	MOUNT ON LIGHT POLE	ONE DOUBLE SIDED PANEL
				D3-101	RIDGELAKE CIR 5900	36	8	2.00	NW/SE		ONE DOUBLE SIDED PANEL
				R1-1	STOP	30	30	6.25	NE		
S3	10	28+55.9	25.0 LT	R2-1	SPEED LIMIT 25	24	30	5.00	S	MOUNT ON LIGHT POLE	

SIGNING NOTES:

1. *THE STATIONS INDICATED IN THE SIGN SUMMARY ARE APPROXIMATE. INSTALL SIGNS AND SIGN FOUNDATIONS PER MASS STANDARD DETAILS. BEFORE INSTALLING ANY SIGN, STAKE THE LOCATION OF ALL SIGNS FOR THE ENGINEER'S REVIEW AND APPROVAL.*
2. *PROVIDE PERFORATED STEEL TUBE (PST) SIGN POSTS OF THE SIZE INDICATED IN THE SIGN SUMMARY.*
3. *INSTALL THE POSTS FOR STOP SIGNS AT LOCATIONS THAT CONFORM TO MASS STANDARD DETAIL 70-18.*
4. *ALL STOP SIGNS AND STREET NAME SIGNS SHALL REMAIN OPERATIONAL DURING CONSTRUCTION.*
5. *INSTALL SIGN ON LIGHT POLES PER SEE MASS STANDARD DETAIL 70-30.*
6. *THE LETTERING FOR STREET NAME SIGNS (D3 SERIES) SHALL BE FEDERAL HIGHWAY ADMINISTRATION "FHWA 2000 SERIES C" LETTERING, A COMBINATION OF LOWER-CASE LETTERS WITH INITIAL UPPER-CASE LETTERS.*

RECORD DRAWING

1. DATA PROVIDED BY: _____ TITLE: _____
   THIS WILL SERVE TO CERTIFY THAT THESE RECORD DRAWINGS ARE A TRUE AND ACCURATE REPRESENTATION OF THE PROJECT AS CONSTRUCTED.
   CONTRACTOR: _____
   BY: _____ TITLE: _____ DATE: _____
2. DATA TRANSFERRED BY: _____ TITLE: _____
   COMPANY: _____ DATE: _____
3. BASED ON PERIODIC FIELD OBSERVATIONS BY THE ENGINEER (OR AN INDIVIDUAL UNDER HIS/HER DIRECT SUPERVISION), THE CONTRACTOR-PROVIDED DATA APPEARS TO REPRESENT THE PROJECT AS CONSTRUCTED.
   DATA TRANSFER CHECKED BY: _____ TITLE: _____
   COMPANY: _____ DATE: _____
   BY: _____

DATA	DRAWN BY	CHECKED BY
BASE	TS	MJ
TOPOGRAPHY	TS	MJ
PROFILE	RB	JK
STORM SEWER	JH	JK
WATER/SANITARY SEWER	MV	JK
GAS	MV	JK
TELEPHONE	MV	JK
ELECTRIC	TK	BM
DESIGN	RB	JK
QUANTITIES	RB	JK
PRELIMINARY/FINAL	RB	JK
MUNICIPAL/STATE	RB	JK

PLAN CHECK

FIELD BOOKS
DESIGN CRW Books 147, 148, & 151
STAKING
ASBUILT
CONTRACTOR
INSPECTOR

CONSTRUCTION RECORD

BM NO.	LOCATION	ELEV.
GAAB 66	See page D-24 of the MOA Benchmark Book	238.10
GAAB 96	See page D-26 of the MOA Benchmark Book	313.83

BASIS OF THIS DATUM GAAB 1972 ADJUST

VERTICAL DATUM

REV	DATE	DESCRIPTION	BY

REVISIONS

CRW ENGINEERING GROUP, LLC
3940 ARCTIC BLVD. SUITE 300
ANCHORAGE, ALASKA 99503
PHONE: (907) 562-3252
#AECL582-AK

CONSULTANT

STATE OF ALASKA 49TH
Robert W. Burdick
CE-123959
REGISTERED PROFESSIONAL ENGINEER

SEAL

MUNICIPALITY OF ANCHORAGE

PROJECT MANAGEMENT AND ENGINEERING DEPARTMENT

14-50 IMAGE DRIVE / REFLECTION DRIVE AREA ROAD RECONSTRUCTION - PHASE 2 SCHED A

SIGN SUMMARY TABLES

SCALE HOR. 1"=20' VER. N/A | GRID SW1638, SW1738 | DATE SEPT 2019 | STATUS 65% | SHEET S4 of S4

File:J:\JobsData\10133.00 Image Reflection Area Reconstruction\00 CADD\01 Working Set\01 Civil\Phase 2\10133.00 Signing & Striping - Phase 2.dwg

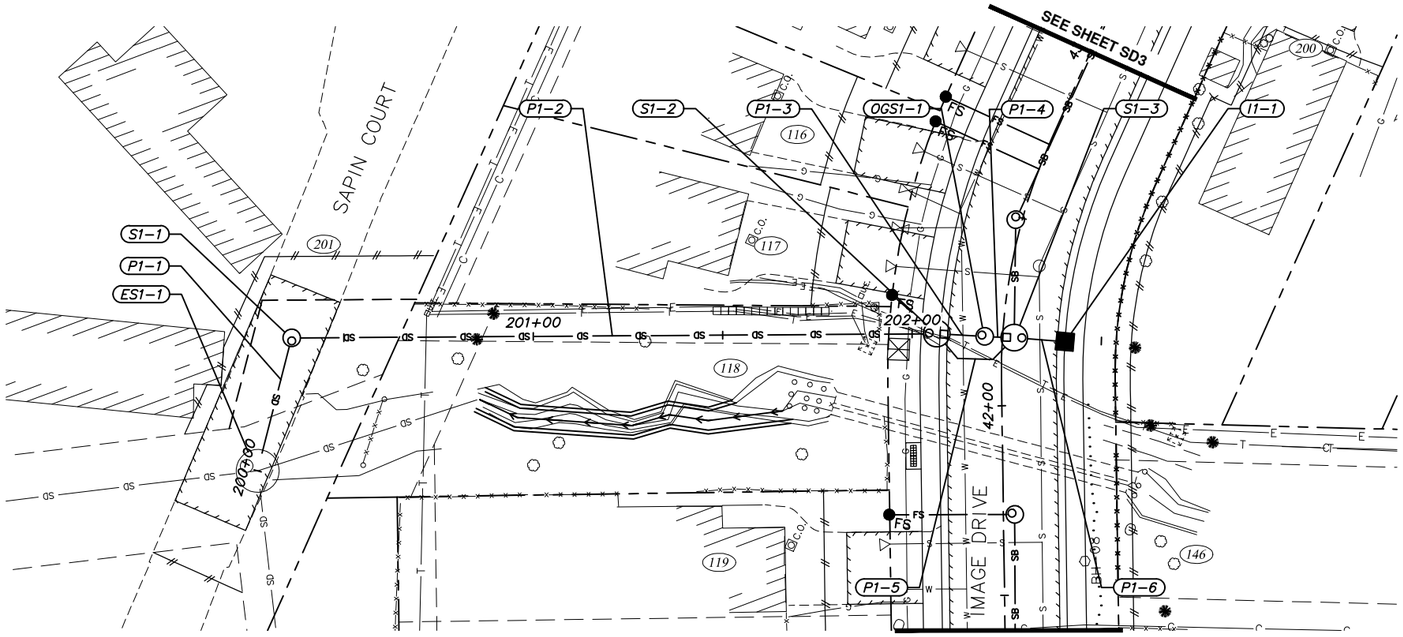

NOTES:

1. AN ASTERISK (*) DENOTES PIPE OR STRUCTURE NOT SHOWN IN PROFILE FOR CLARITY.
2. REFER TO SHEET SD11 FOR GENERAL STORM DRAIN STRUCTURE/PIPE NOTES AND STRUCTURE ABBREVIATIONS USED ON SUMMARY TABLES SHOWN ON THIS SHEET.
3. REFER TO SHEETS SD11–SD13 FOR STORM DRAIN DETAILS.
4. REFER TO SHEET SD14 FOR OGS AND BYPASS STRUCTURE DETAILS.
5. CPEP FITTINGS I.A.W. MASS SECTION 55.002 SHALL BE USED FOR BYPASS PIPING, UNLESS OTHERWISE DIRECTED BY THE ENGINEER. LOCATION OF FITTINGS SHOWN ARE APPROXIMATE. CONTRACTOR SHALL FIELD LOCATE FITTINGS WITH ENGINEER'S APPROVAL TO MINIMIZE CONFLICTS WITH OTHER UTILITIES AND OBSTRUCTIONS. CONCRETE THRUST BLOCKS I.A.W. MASS STANDARD DETAIL 60–06 SHALL BE INSTALLED AT ALL FITTINGS. PAYMENT FOR THRUST BLOCKS SHALL BE CONSIDERED INCIDENTAL TO PAY ITEM 55.02, FURNISH, INSTALL, AND TELEVISE PIPE.

55.05 & 55.09 – STORM DRAIN STRUCTURES

STRUCTURE ID	TYPE OF STRUCTURE	TYPE OF CASTING	NORTHING	EASTING	TOP OF CASTING ELEVATION	CURB TYPE	COMMENTS
ES1–1	CONNECT	MH	329651.54	367800.69	197.91	N/A	CONNECT TO EXISTING MH
S1–1	MH I	MH	329657.88	367836.32	197.631	N/A	
S1–2	CB MH II	CI	329503.34	367907.68	196.572	2	
S1–3	BYPASS, MH II	CI	329484.22	367915.21	196.616	N/A	SEE DETAIL 2, SHEET SD12
OGS1–1	OGS	MH	329491.47	367912.25	196.584	N/A	STORMCEPTOR STC450i
I1–1	CB	CI	329471.61	367919.82	196.788	2	

55.02 & 55.03 – STORM DRAIN & SUBDRAIN PIPE

PIPE ID	SIZE (IN.)	PIPE TYPE	LENGTH (FT.)	FROM	TO	INLET ELEVATION	OUTLET ELEVATION	SLOPE
P1–1	24	S	36.35	S1–1	ES1–1	190.330	190.240	0.31%
P1–2	24	S	170.22	S1–2	S1–1	190.870	190.380	0.30%
P1–3	24	SP	12.72	OGS1–1	S1–2	190.950	190.920	0.39%
P1–4	24	SP	7.83	S1–3	OGS1–1	191.210	191.200	0.35%
P1–5**	12	S	25.92	S1–3	S1–2	191.200	190.920	1.41%
P1–6	12	S	13.43	I1–1	S1–3	192.190	192.110	0.95%

** OGS–1 MAINTENANCE BYPASS PIPE, SEE NOTE 5.

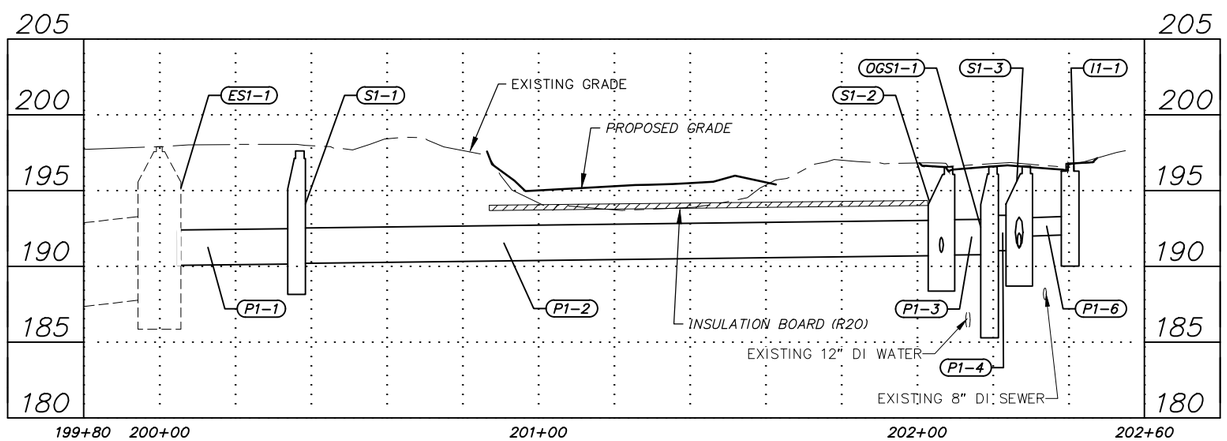

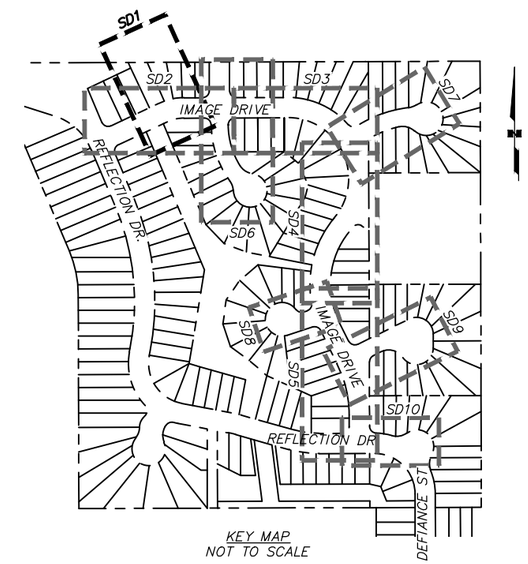

KEY MAP
NOT TO SCALE

RECORD DRAWING

1. DATA PROVIDED BY: _____ TITLE: _____
   THIS WILL SERVE TO CERTIFY THAT THESE RECORD DRAWINGS ARE A TRUE AND ACCURATE REPRESENTATION OF THE PROJECT AS CONSTRUCTED.
   CONTRACTOR: _____
   BY: _____ TITLE: _____ DATE: _____
2. DATA TRANSFERRED BY: _____ TITLE: _____
   COMPANY: _____ DATE: _____
3. BASED ON PERIODIC FIELD OBSERVATIONS BY THE ENGINEER (OR AN INDIVIDUAL UNDER HIS/HER DIRECT SUPERVISION), THE CONTRACTOR–PROVIDED DATA APPEARS TO REPRESENT THE PROJECT AS CONSTRUCTED.
   DATA TRANSFER CHECKED BY: _____ TITLE: _____
   COMPANY: _____ DATE: _____
   BY: _____

DATA	DRAWN BY	CHECKED BY
BASE	TS	MJ
TOPOGRAPHY	TS	MJ
PROFILE	RB	JK
STORM SEWER	JH	JK
WATER/SANITARY SEWER	MV	JK
GAS	MV	JK
TELEPHONE	MV	JK
ELECTRIC	TK	BM
DESIGN	RB	JK
QUANTITIES	RB	JK
PRELIMINARY/FINAL	RB	JK
MUNICIPAL/STATE	RB	JK

PLAN CHECK

GRAPHIC 40 20 0 20 40 SCALE

FIELD BOOKS	BM NO.	LOCATION	ELEV.
DESIGN CRW Books 147, 148, & 151	GAAB 66	See page D–24 of the MOA Benchmark Book	238.10
	GAAB 96	See page D–26 of the MOA Benchmark Book	313.83
STAKING			
ASBUILT			
CONTRACTOR	BASIS OF THIS DATUM GAAB 1972 ADJUST		
INSPECTOR			

CONSTRUCTION RECORD — VERTICAL DATUM

REV	DATE	DESCRIPTION	BY

REVISIONS

CRW ENGINEERING GROUP, LLC
3940 ARCTIC BLVD. SUITE 300
ANCHORAGE, ALASKA 99503
PHONE: (907) 562–3252
#AECL882–AK

CONSULTANT

STATE OF ALASKA 49 TH Joseph C. Hegna CE-11770 REGISTERED PROFESSIONAL ENGINEER

SEAL

MUNICIPALITY OF ANCHORAGE

PROJECT MANAGEMENT AND ENGINEERING DEPARTMENT

14–50 IMAGE DRIVE / REFLECTION DRIVE AREA ROAD RECONSTRUCTION – PHASE 2 SCHED B

STORM DRAIN PLAN & PROFILE

IMAGE DRIVE & SAPIN COURT

SCALE HOR. 1"=20' VER. 1"=5' | GRID SW1638, SW1738 | DATE SEPT 2019 | STATUS 65% | SHEET SD1 of SD14

File:J:\JobsData\10133.00 Image Reflection Area Reconstruction\00 CADD\01 Working Set\01 Civil\Phase 2\10133.00 Plan & Profile – Storm Drain – Phase 2.dwg

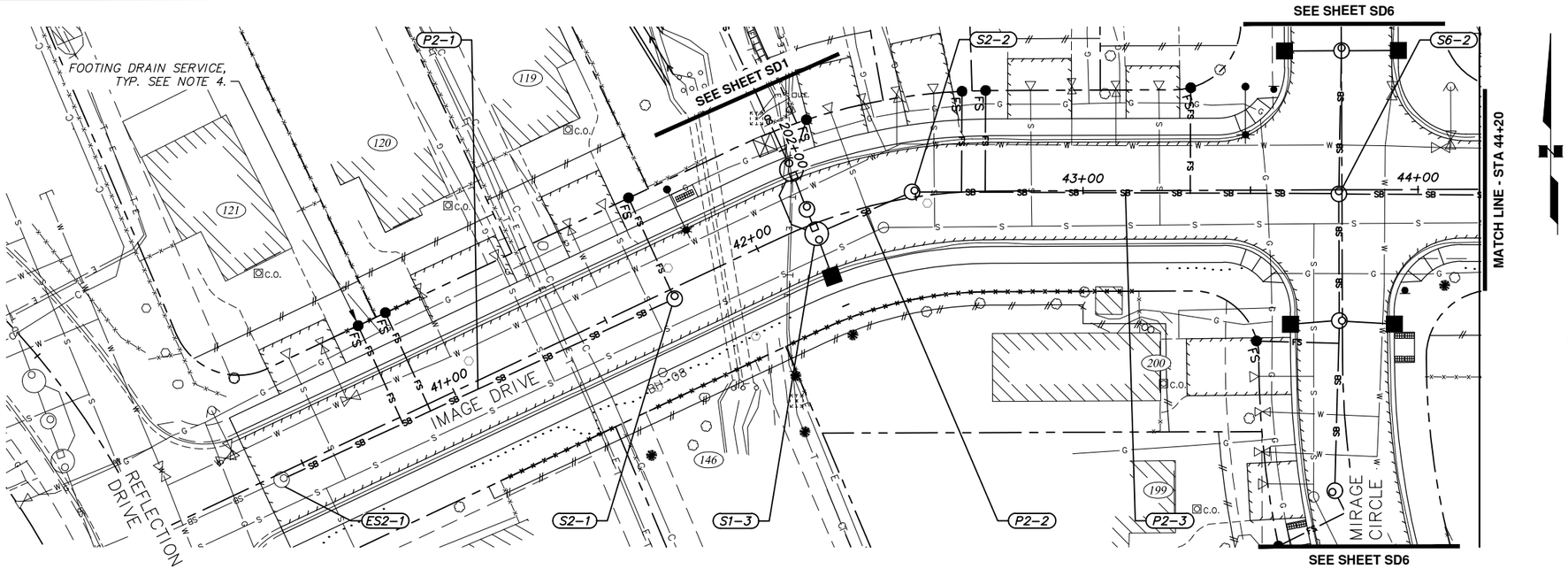

NOTES:

1. AN ASTERISK (*) DENOTES PIPE OR STRUCTURE NOT SHOWN IN PROFILE FOR CLARITY.
2. REFER TO SHEET SD11 FOR GENERAL STORM DRAIN STRUCTURE/PIPE NOTES AND STRUCTURE ABBREVIATIONS USED ON SUMMARY TABLES SHOWN ON THIS SHEET.
3. REFER TO SHEETS SD11–SD13 FOR STORM DRAIN DETAILS.
4. REFER TO SHEET SD14 FOR FOOTING DRAIN SERVICE SUMMARY TABLE.

55.05 & 55.09 – STORM DRAIN STRUCTURES

STRUCTURE ID	TYPE OF STRUCTURE	TYPE OF CASTING	STATION	OFFSET TO STRUCTURE C/L	TOP OF CASTING ELEVATION	CURB TYPE	COMMENTS
ES2–1	CONNECT	MH	40+42.00	1.81' RT	198.29	N/A	
S2–1	MH I	MH	41+71.29	2.97' RT	196.963	N/A	
S2–2	MH I	MH	42+49.10	1.65' LT	196.799	N/A	

55.02 & 55.03 – STORM DRAIN & SUBDRAIN PIPE

PIPE NAME	SIZE (IN.)	PIPE TYPE	LENGTH (FT.)	FROM	TO	INLET ELEVATION	OUTLET ELEVATION	SLOPE
P2–1	12	SP	129.08	S2–1	ES2–1	192.870	192.490	0.30%
P2–2	24	SP	31.08	S2–2	S1–3	191.340	191.260	0.31%
P2–3	24	SP	127.38	S6–2	S2–2	191.760	191.390	0.30%

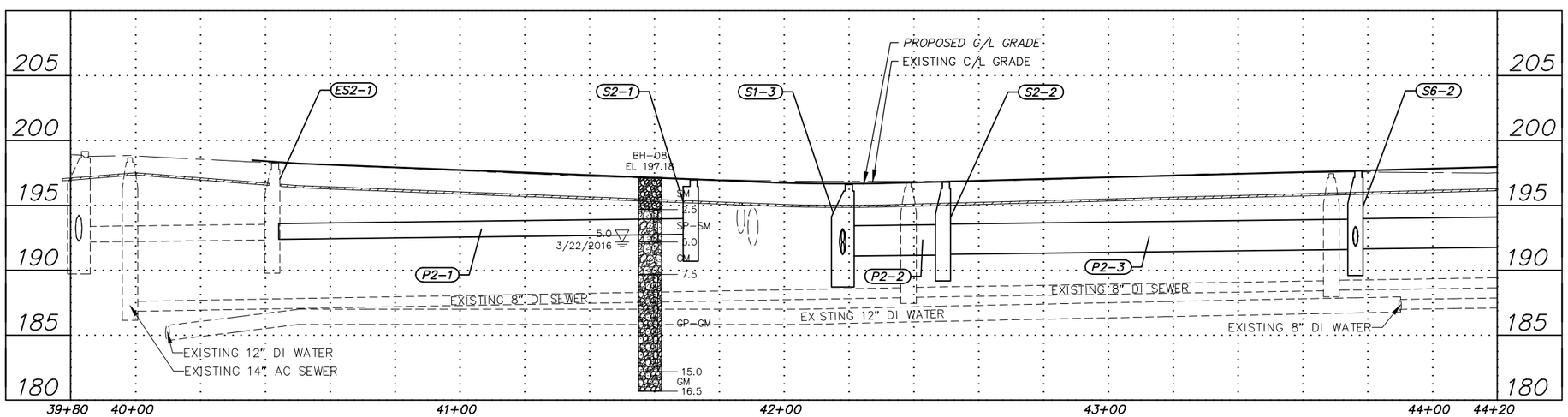

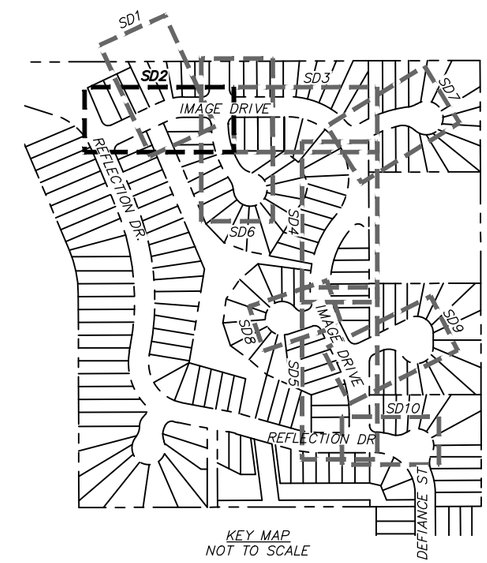

KEY MAP
NOT TO SCALE

RECORD DRAWING
1. DATA PROVIDED BY: _____ TITLE: _____
THIS WILL SERVE TO CERTIFY THAT THESE RECORD DRAWINGS ARE A TRUE AND ACCURATE REPRESENTATION OF THE PROJECT AS CONSTRUCTED.
CONTRACTOR: _____
BY: _____ TITLE: _____ DATE: _____
2. DATA TRANSFERRED BY: _____ TITLE: _____
COMPANY: _____ DATE: _____
3. BASED ON PERIODIC FIELD OBSERVATIONS BY THE ENGINEER (OR AN INDIVIDUAL UNDER HIS/HER DIRECT SUPERVISION), THE CONTRACTOR–PROVIDED DATA APPEARS TO REPRESENT THE PROJECT AS CONSTRUCTED.
DATA TRANSFER CHECKED BY: _____ TITLE: _____
COMPANY: _____ DATE: _____
BY: _____

DATA	DRAWN BY	CHECKED BY
BASE	TS	MJ
TOPOGRAPHY	TS	MJ
PROFILE	RB	JK
STORM SEWER	JH	JK
WATER/SANITARY SEWER	MV	JK
GAS	MV	JK
TELEPHONE	MV	JK
ELECTRIC	TK	BM
DESIGN	RB	JK
QUANTITIES	RB	JK
PRELIMINARY/FINAL	RB	JK
MUNICIPAL/STATE	RB	JK
PLAN CHECK		

GRAPHIC 40 20 0 20 40 SCALE

FIELD BOOKS	BM NO.	LOCATION	ELEV.
DESIGN CRW Books 147, 148, & 151	GAAB 66	See page D–24 of the MOA Benchmark Book	238.10
	GAAB 96	See page D–26 of the MOA Benchmark Book	313.83
STAKING			
ASBUILT			
CONTRACTOR	BASIS OF THIS DATUM GAAB 1972 ADJUST		
INSPECTOR			
CONSTRUCTION RECORD	VERTICAL DATUM		

REV	DATE	DESCRIPTION	BY
REVISIONS			

CRW ENGINEERING GROUP, LLC
3940 ARCTIC BLVD. SUITE 300
ANCHORAGE, ALASKA 99503
PHONE: (907) 562–3252
#AECL882–AK
CONSULTANT

STATE OF ALASKA 49 TH Joseph C. Hegna CE-11770 REGISTERED PROFESSIONAL ENGINEER
SEAL

MUNICIPALITY OF ANCHORAGE

PROJECT MANAGEMENT AND ENGINEERING DEPARTMENT

14–50 IMAGE DRIVE / REFLECTION DRIVE AREA ROAD RECONSTRUCTION – PHASE 2 SCHED B

STORM DRAIN PLAN & PROFILE

IMAGE DRIVE

SCALE HOR. 1"=20' VER. 1"=5' | GRID SW1638, SW1738 | DATE SEPT 2019 | STATUS 65% | SHEET SD2 of SD14

File: J:\JobsData\10133.00 Image Reflection Area Reconstruction\00 CADD\01 Working Set\01 Civil\Phase 2\10133.00 Plan & Profile – Storm Drain – Phase 2.dwg

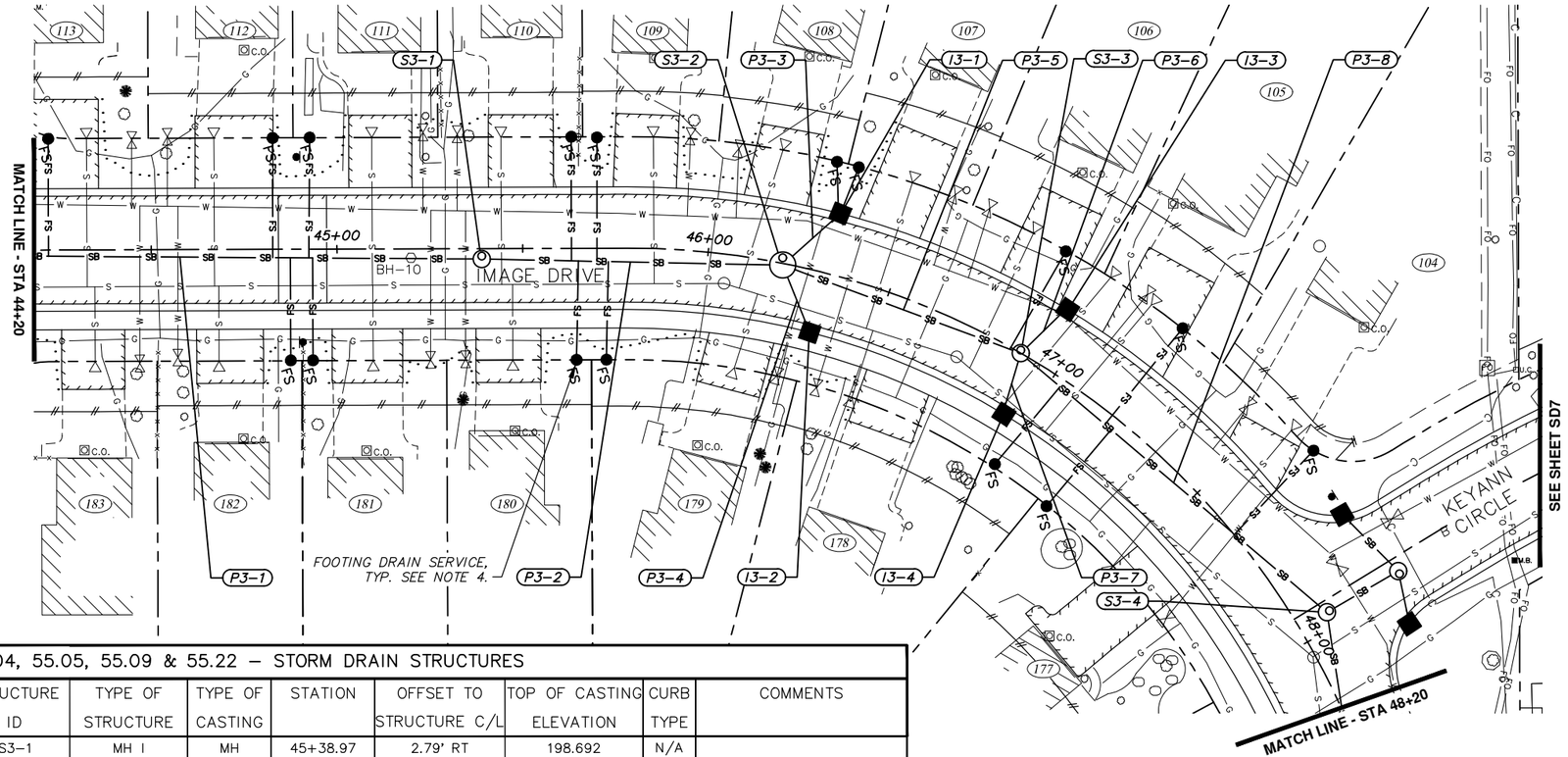

NOTES:

1. AN ASTERISK (*) DENOTES PIPE OR STRUCTURE NOT SHOWN IN PROFILE FOR CLARITY.
2. REFER TO SHEET SD11 FOR GENERAL STORM DRAIN STRUCTURE/PIPE NOTES AND STRUCTURE ABBREVIATIONS USED ON SUMMARY TABLES SHOWN ON THIS SHEET.
3. REFER TO SHEETS SD11–SD13 FOR STORM DRAIN DETAILS.
4. REFER TO SHEET SD14 FOR FOOTING DRAIN SERVICE SUMMARY TABLE.

55.02 & 55.03 – STORM DRAIN & SUBDRAIN PIPE

PIPE NAME	SIZE (IN.)	PIPE TYPE	LENGTH (FT.)	FROM	TO	INLET ELEVATION	OUTLET ELEVATION	SLOPE
P3–1	24	SP	162.67	S3–1	S6–2	192.280	191.810	0.30%
P3–2	24	SP	81.06	S3–2	S3–1	192.560	192.330	0.30%
P3–3	12	S	19.84	I3–1	S3–2	193.670	192.660	6.38%
P3–4	12	S	18.49	I3–2	S3–2	193.800	192.660	7.87%
P3–5	24	SP	68.33	S3–3	S3–2	192.800	192.610	0.30%
P3–6	12	S	17.32	I3–3	S3–3	193.580	193.500	0.60%
P3–7	12	S	17.06	I3–4	S3–3	193.550	193.500	0.38%
P3–8	18	SP	108.01	S3–4	S3–3	193.550	193.200	0.34%

55.04, 55.05, 55.09 & 55.22 – STORM DRAIN STRUCTURES

STRUCTURE ID	TYPE OF STRUCTURE	TYPE OF CASTING	STATION	OFFSET TO STRUCTURE C/L	TOP OF CASTING ELEVATION	CURB TYPE	COMMENTS
S3–1	MH I	MH	45+38.97	2.79' RT	198.692	N/A	
S3–2	MH II	MH	46+20.39	0.51' RT	198.424	N/A	
S3–3	MH I	MH	46+89.12	0.08' RT	198.013	N/A	
S3–4	MH I	MH	47+95.84	8.48' LT	198.462	N/A	
I3–1	CB	CI	46+32.00	16.50' LT	198.169	2	
I3–2	CB	CI	46+32.00	16.50' RT	198.169	2	
I3–3	CB	CI	46+93.85	16.50' LT	197.889	2	
I3–4	CB	CI	46+93.85	16.50' RT	197.889	2	

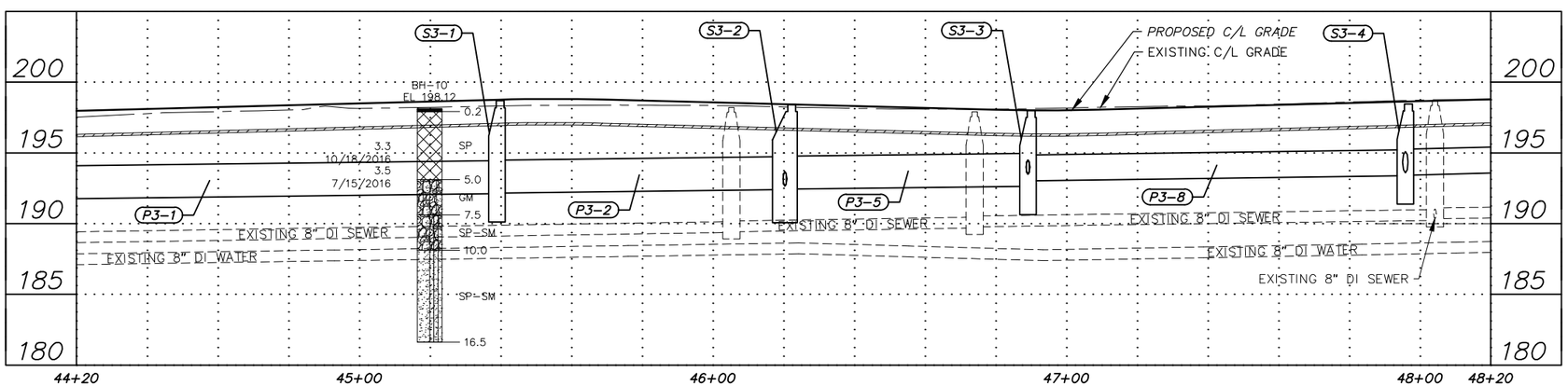

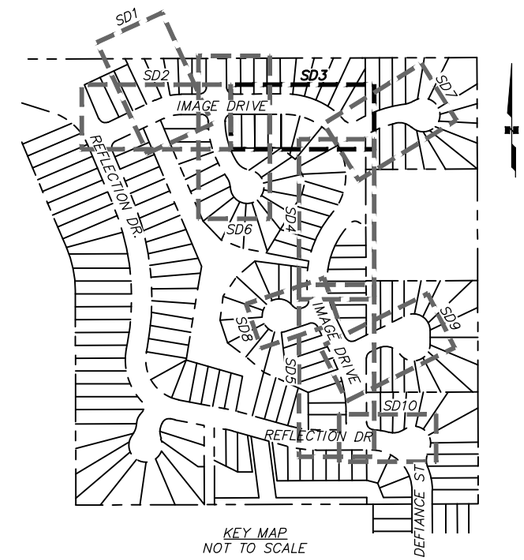

KEY MAP
NOT TO SCALE

RECORD DRAWING

1. DATA PROVIDED BY: _____ TITLE: _____
   THIS WILL SERVE TO CERTIFY THAT THESE RECORD DRAWINGS ARE A TRUE AND ACCURATE REPRESENTATION OF THE PROJECT AS CONSTRUCTED.
   CONTRACTOR: _____
   BY: _____ TITLE: _____ DATE: _____
2. DATA TRANSFERRED BY: _____ TITLE: _____
   COMPANY: _____ DATE: _____
3. BASED ON PERIODIC FIELD OBSERVATIONS BY THE ENGINEER (OR AN INDIVIDUAL UNDER HIS/HER DIRECT SUPERVISION), THE CONTRACTOR-PROVIDED DATA APPEARS TO REPRESENT THE PROJECT AS CONSTRUCTED.
   DATA TRANSFER CHECKED BY: _____ TITLE: _____
   COMPANY: _____ DATE: _____
   BY: _____

DATA	DRAWN BY	CHECKED BY
BASE	TS	MJ
TOPOGRAPHY	TS	MJ
PROFILE	RB	JK
STORM SEWER	JH	JK
WATER/SANITARY SEWER	MV	JK
GAS	MV	JK
TELEPHONE	MV	JK
ELECTRIC	TK	BM
DESIGN	RB	JK
QUANTITIES	RB	JK
PRELIMINARY/FINAL	RB	JK
MUNICIPAL/STATE	RB	JK

PLAN CHECK

GRAPHIC 40 20 0 20 40 SCALE

FIELD BOOKS	BM NO.	LOCATION	ELEV.
DESIGN CRW Books 147, 148, & 151	GAAB 66	See page D–24 of the MOA Benchmark Book	238.10
	GAAB 96	See page D–26 of the MOA Benchmark Book	313.83
STAKING			
ASBUILT			
CONTRACTOR	BASIS OF THIS DATUM GAAB 1972 ADJUST		
INSPECTOR			

CONSTRUCTION RECORD

VERTICAL DATUM

REV	DATE	DESCRIPTION	BY

REVISIONS

CRW ENGINEERING GROUP, LLC
3940 ARCTIC BLVD. SUITE 300
ANCHORAGE, ALASKA 99503
PHONE: (907) 562–3252
#ACL882–AK

CONSULTANT

STATE OF ALASKA 49 TH
Joseph C. Hegna
CE-11770
REGISTERED PROFESSIONAL ENGINEER

SEAL

MUNICIPALITY OF ANCHORAGE

PROJECT MANAGEMENT AND ENGINEERING DEPARTMENT

14–50 IMAGE DRIVE / REFLECTION DRIVE AREA ROAD RECONSTRUCTION – PHASE 2 SCHED B

STORM DRAIN PLAN & PROFILE

IMAGE DRIVE

SCALE HOR. 1"=20' VER. 1"=5'

GRID SW1638, SW1738

DATE SEPT 2019

STATUS 65%

SHEET SD3 of SD14

File:J:\JobsData\10133.00 Image Reflection Area Reconstruction\00 CADD\01 Working Set\01 Civil\Phase 2\10133.00 Plan & Profile – Storm Drain – Phase 2.dwg

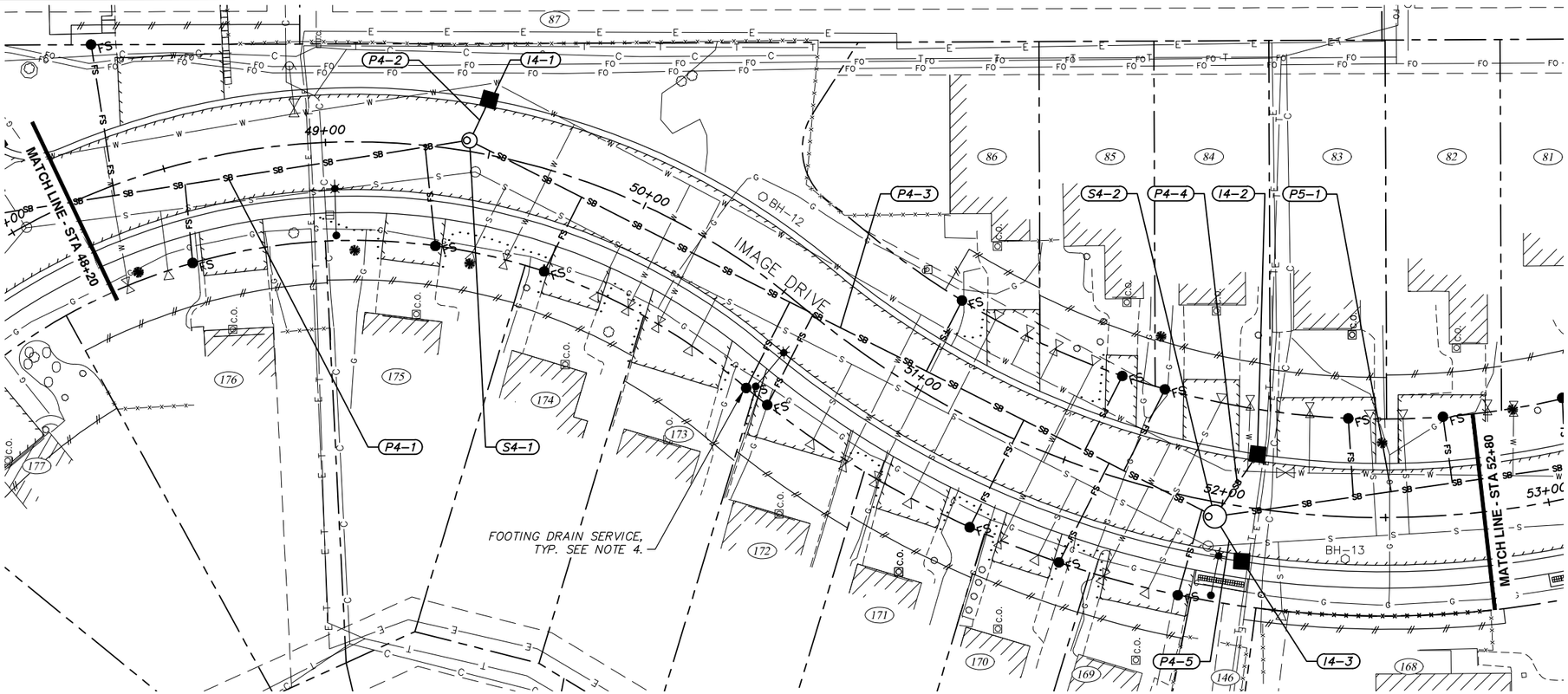

NOTES:

1. AN ASTERISK (*) DENOTES PIPE OR STRUCTURE NOT SHOWN IN PROFILE FOR CLARITY.
2. REFER TO SHEET SD11 FOR GENERAL STORM DRAIN STRUCTURE/PIPE NOTES AND STRUCTURE ABBREVIATIONS USED ON SUMMARY TABLES SHOWN ON THIS SHEET.
3. REFER TO SHEETS SD11–SD13 FOR STORM DRAIN DETAILS.
4. REFER TO SHEET SD14 FOR FOOTING DRAIN SERVICE SUMMARY TABLE.

55.05 & 55.09 – STORM DRAIN STRUCTURES

STRUCTURE ID	TYPE OF STRUCTURE	TYPE OF CASTING	STATION	OFFSET TO STRUCTURE C/L	TOP OF CASTING ELEVATION	CURB TYPE	COMMENTS
S4–1	MH I	MH	49+43.44	3.25' LT	199.542	N/A	
S4–2	MH II	MH	51+98.52	4.39' RT	200.589	N/A	
I4–1	CB	CI	49+47.11	16.54' LT	199.512	2	
I4–2	CB	CI	52+08.47	16.50' LT	200.534	2	
I4–3	CB	CI	52+08.47	16.50' RT	200.534	2	

55.02 & 55.03 – STORM DRAIN & SUBDRAIN PIPE

PIPE NAME	SIZE (IN.)	PIPE TYPE	LENGTH (FT.)	FROM	TO	INLET ELEVATION	OUTLET ELEVATION	SLOPE
P4–1	18	SP	148.70	S4–1	S3–4	194.550	193.600	0.66%
P4–2	12	S	13.84	I4–1	S4–1	195.200	195.150	0.51%
P4–3	18	SP	254.24	S4–2	S4–1	195.500	194.650	0.34%
P4–4	12	S	23.04	I4–2	S4–2	196.200	196.100	0.55%
P4–5	12	S	15.91	I4–3	S4–2	196.200	196.100	0.92%

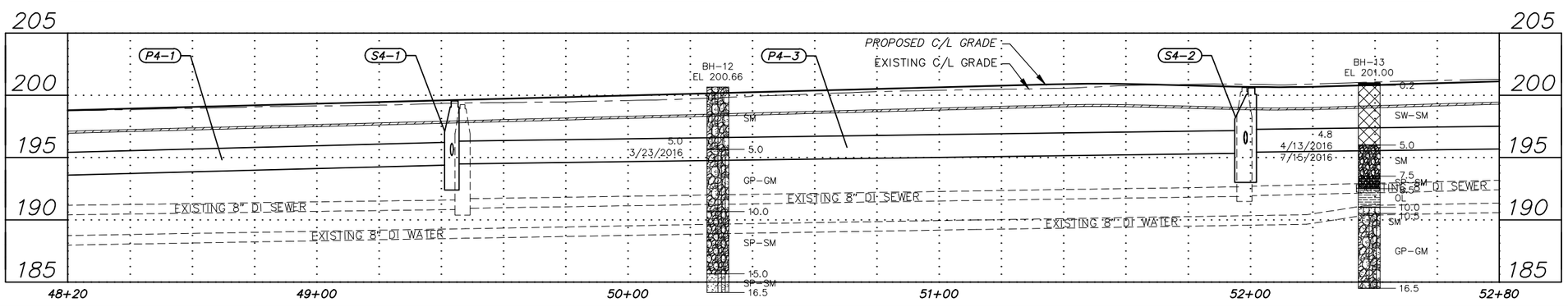

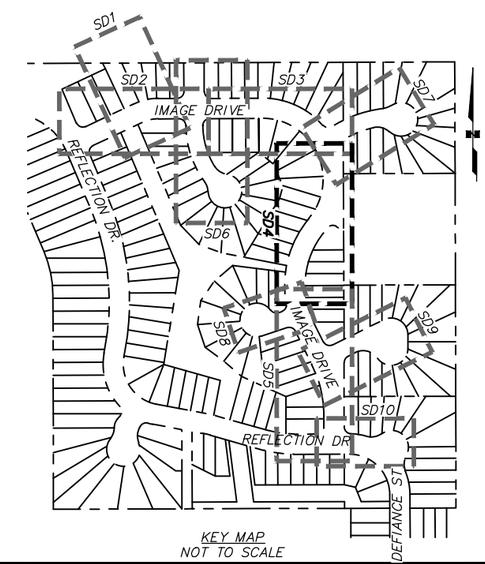

KEY MAP
NOT TO SCALE

RECORD DRAWING

1. DATA PROVIDED BY: _____ TITLE: _____
   THIS WILL SERVE TO CERTIFY THAT THESE RECORD DRAWINGS ARE A TRUE AND ACCURATE REPRESENTATION OF THE PROJECT AS CONSTRUCTED.
   CONTRACTOR: _____
   BY: _____ TITLE: _____ DATE: _____
2. DATA TRANSFERRED BY: _____ TITLE: _____
   COMPANY: _____ DATE: _____
3. BASED ON PERIODIC FIELD OBSERVATIONS BY THE ENGINEER (OR AN INDIVIDUAL UNDER HIS/HER DIRECT SUPERVISION), THE CONTRACTOR-PROVIDED DATA APPEARS TO REPRESENT THE PROJECT AS CONSTRUCTED.
   DATA TRANSFER CHECKED BY: _____ TITLE: _____
   COMPANY: _____ DATE: _____
   BY: _____

DATA	DRAWN BY	CHECKED BY
BASE	TS	MJ
TOPOGRAPHY	TS	MJ
PROFILE	RB	JK
STORM SEWER	JH	JK
WATER/SANITARY SEWER	MV	JK
GAS	MV	JK
TELEPHONE	MV	JK
ELECTRIC	TK	BM
DESIGN	RB	JK
QUANTITIES	RB	JK
PRELIMINARY/FINAL	RB	JK
MUNICIPAL/STATE	RB	JK

PLAN CHECK

GRAPHIC SCALE 40 20 0 20 40

FIELD BOOKS	BM NO.	LOCATION	ELEV.
DESIGN CRW Books 147, 148, & 151	GAAB 66	See page D-24 of the MOA Benchmark Book	238.10
	GAAB 96	See page D-26 of the MOA Benchmark Book	313.83
STAKING			
ASBUILT			
CONTRACTOR	BASIS OF THIS DATUM GAAB 1972 ADJUST		
INSPECTOR			

CONSTRUCTION RECORD — VERTICAL DATUM

REV	DATE	DESCRIPTION	BY

REVISIONS

CRW ENGINEERING GROUP, LLC
3940 ARCTIC BLVD. SUITE 300
ANCHORAGE, ALASKA 99503
PHONE: (907) 562-3252
#AECL882-AK

CONSULTANT

STATE OF ALASKA 49 TH Joseph C. Hegna CE-11770 REGISTERED PROFESSIONAL ENGINEER

SEAL

MUNICIPALITY OF ANCHORAGE

PROJECT MANAGEMENT AND ENGINEERING DEPARTMENT

14–50 IMAGE DRIVE / REFLECTION DRIVE AREA ROAD RECONSTRUCTION – PHASE 2 SCHED B

STORM DRAIN PLAN & PROFILE

IMAGE DRIVE

SCALE HOR. 1"=20' VER. 1"=5' | GRID SW1638, SW1738 | DATE SEPT 2019 | STATUS 65% | SHEET SD4 of SD14

File:J:\JobsData\10133.00 Image Reflection Area Reconstruction\00 CADD\01 Working Set\01 Civil\Phase 2\10133.00 Plan & Profile – Storm Drain – Phase 2.dwg

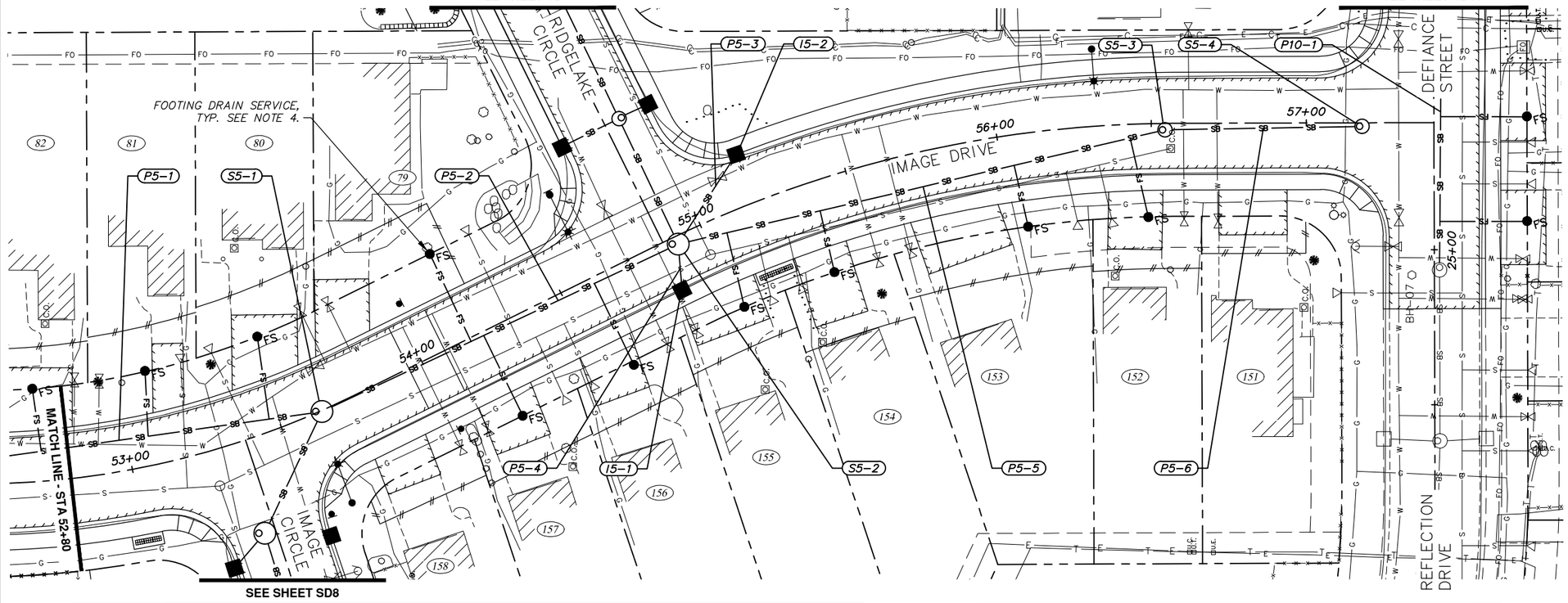

NOTES:

1. AN ASTERISK (*) DENOTES PIPE OR STRUCTURE NOT SHOWN IN PROFILE FOR CLARITY.
2. REFER TO SHEET SD11 FOR GENERAL STORM DRAIN STRUCTURE/PIPE NOTES AND STRUCTURE ABBREVIATIONS USED ON SUMMARY TABLES SHOWN ON THIS SHEET.
3. REFER TO SHEETS SD11–SD13 FOR STORM DRAIN DETAILS.
4. REFER TO SHEET SD14 FOR FOOTING DRAIN SERVICE SUMMARY TABLE.

55.05 & 55.09 – STORM DRAIN STRUCTURES

STRUCTURE ID	TYPE OF STRUCTURE	TYPE OF CASTING	STATION	OFFSET TO STRUCTURE C/L	TOP OF CASTING ELEVATION	CURB TYPE	COMMENTS
S5–1	MH II	MH	53+63.95	0.35' RT	201.723	N/A	
S5–2	MH II	MH	54+90.90	2.66' RT	202.604	N/A	
S5–3	MH I	MH	56+54.39	2.09' RT	203.780	N/A	
S5–4	MH I	MH	57+17.91	1.19' RT	204.211	N/A	
I5–1	CB	CI	54+85.40	16.50' RT	202.497	2	
I5–2	CB	CI	55+18.98	16.50' LT	200.608	2	

55.02 & 55.03 – STORM DRAIN & SUBDRAIN PIPE

PIPE NAME	SIZE (IN.)	PIPE TYPE	LENGTH (FT.)	FROM	TO	INLET ELEVATION	OUTLET ELEVATION	SLOPE
P5–1	18	SP	164.40	S5–1	S4–2	196.100	195.600	0.32%
P5–2	18	SP	126.95	S5–2	S5–1	197.030	196.300	0.60%
P5–3	12	SP	34.41	I5–2	S5–2	198.460	198.070	1.33%
P5–4	12	SP	14.84	I5–1	S5–2	198.100	198.070	0.30%
P5–5	18	SP	161.17	S5–3	S5–2	198.700	197.570	0.72%
P5–6	18	SP	63.51	S5–4	S5–3	199.300	198.800	0.84%

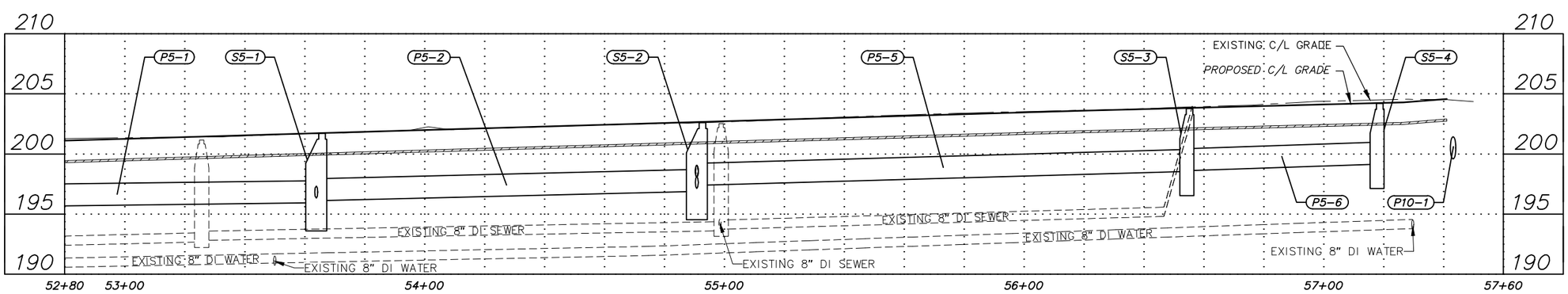

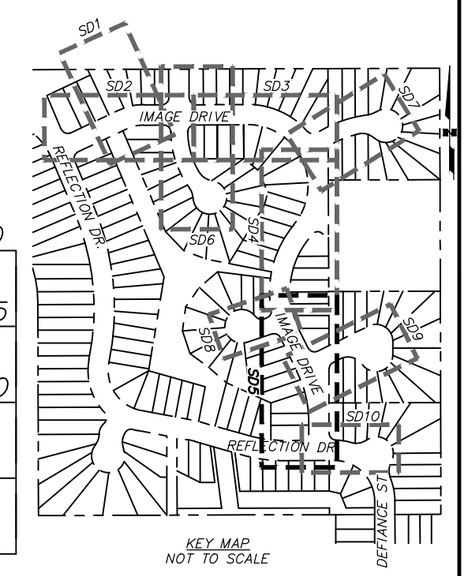

KEY MAP
NOT TO SCALE

RECORD DRAWING
1. DATA PROVIDED BY: _____ TITLE: _____
THIS WILL SERVE TO CERTIFY THAT THESE RECORD DRAWINGS ARE A TRUE AND ACCURATE REPRESENTATION OF THE PROJECT AS CONSTRUCTED.
CONTRACTOR: _____
BY: _____ TITLE: _____ DATE: _____
2. DATA TRANSFERRED BY: _____ TITLE: _____
COMPANY: _____ DATE: _____
3. BASED ON PERIODIC FIELD OBSERVATIONS BY THE ENGINEER (OR AN INDIVIDUAL UNDER HIS/HER DIRECT SUPERVISION), THE CONTRACTOR–PROVIDED DATA APPEARS TO REPRESENT THE PROJECT AS CONSTRUCTED.
DATA TRANSFER CHECKED BY: _____ TITLE: _____
COMPANY: _____ DATE: _____
BY: _____

DATA	DRAWN BY	CHECKED BY
BASE	TS	MJ
TOPOGRAPHY	TS	MJ
PROFILE	RB	JK
STORM SEWER	JH	JK
WATER/SANITARY SEWER	MV	JK
GAS	MV	JK
TELEPHONE	MV	JK
ELECTRIC	TK	BM
DESIGN	RB	JK
QUANTITIES	RB	JK
PRELIMINARY/FINAL	RB	JK
MUNICIPAL/STATE	RB	JK

PLAN CHECK

GRAPHIC 40 20 0 20 40 SCALE

FIELD BOOKS
DESIGN CRW Books 147, 148, & 151
STAKING
ASBUILT
CONTRACTOR
INSPECTOR

CONSTRUCTION RECORD

BM NO.	LOCATION	ELEV.
GAAB 66	See page D–24 of the MOA Benchmark Book	238.10
GAAB 96	See page D–26 of the MOA Benchmark Book	313.83

BASIS OF THIS DATUM GAAB 1972 ADJUST

VERTICAL DATUM

REV	DATE	DESCRIPTION	BY

REVISIONS

CRW ENGINEERING GROUP, LLC
3940 ARCTIC BLVD. SUITE 300
ANCHORAGE, ALASKA 99503
PHONE: (907) 562–3252
#AECL682–AK

CONSULTANT

STATE OF ALASKA 49 TH Joseph C. Hegna CE-11770 REGISTERED PROFESSIONAL ENGINEER

SEAL

MUNICIPALITY OF ANCHORAGE

PROJECT MANAGEMENT AND ENGINEERING DEPARTMENT

14–50 IMAGE DRIVE / REFLECTION DRIVE AREA ROAD RECONSTRUCTION – PHASE 2 SCHED B

STORM DRAIN PLAN & PROFILE

IMAGE DRIVE

SCALE HOR. 1"=20' VER. 1"=5'
GRID SW1638, SW1738
DATE SEPT 2019
STATUS 65%
SHEET SD5 of SD14

File:J:\JobsData\10133.00 Image Reflection Area Reconstruction\00 CADD\01 Working Set\01 Civil\Phase 2\10133.00 Plan & Profile – Storm Drain – Phase 2.dwg

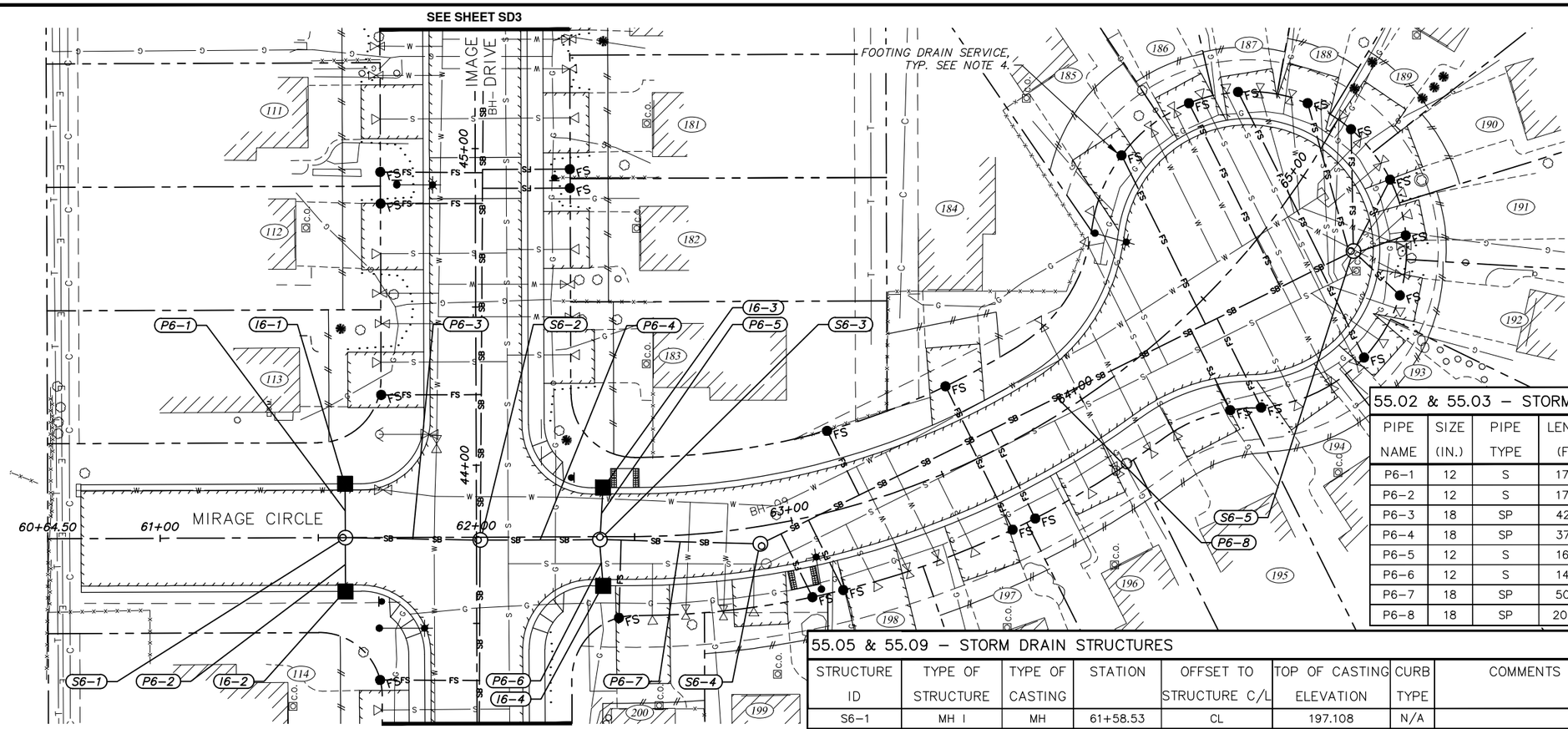

NOTES:

1. AN ASTERISK (*) DENOTES PIPE OR STRUCTURE NOT SHOWN IN PROFILE FOR CLARITY.
2. REFER TO SHEET SD11 FOR GENERAL STORM DRAIN STRUCTURE/PIPE NOTES AND STRUCTURE ABBREVIATIONS USED ON SUMMARY TABLES SHOWN ON THIS SHEET.
3. REFER TO SHEETS SD11–SD13 FOR STORM DRAIN DETAILS.
4. REFER TO SHEET SD14 FOR FOOTING DRAIN SERVICE SUMMARY TABLE.

55.02 & 55.03 – STORM DRAIN & SUBDRAIN PIPE

PIPE NAME	SIZE (IN.)	PIPE TYPE	LENGTH (FT.)	FROM	TO	INLET ELEVATION	OUTLET ELEVATION	SLOPE
P6–1	12	S	17.00	I6–1	S6–1	192.520	192.480	0.31%
P6–2	12	S	17.00	I6–2	S6–1	192.530	192.480	0.38%
P6–3	18	SP	42.72	S6–1	S6–2	191.980	191.860	0.31%
P6–4	18	SP	37.77	S6–3	S6–2	192.050	191.860	0.56%
P6–5	12	S	16.50	I6–3	S6–3	193.520	192.650	6.96%
P6–6	12	S	14.60	I6–4	S6–3	192.720	192.650	0.66%
P6–7	18	SP	50.77	S6–4	S6–3	192.600	192.150	0.96%
P6–8	18	SP	209.12	S6–5	S6–4	194.400	192.700	0.83%

55.05 & 55.09 – STORM DRAIN STRUCTURES

STRUCTURE ID	TYPE OF STRUCTURE	TYPE OF CASTING	STATION	OFFSET TO STRUCTURE C/L	TOP OF CASTING ELEVATION	CURB TYPE	COMMENTS
S6–1	MH I	MH	61+58.53	CL	197.108	N/A	
S6–2	MH I	MH	62+01.24	0.93' RT	197.650	N/A	
S6–3	MH I	MH	62+39.01	0.93' RT	197.104	N/A	
S6–4	MH I	MH	62+89.07	5.51' RT	197.365	N/A	
S6–5	MH I	MH	64+90.19	26.46' RT	198.927	N/A	
I6–1	CB	CI	61+58.53	17.00' LT	196.978	2	
I6–2	CB	CI	61+58.53	17.00' RT	196.978	2	
I6–3	CB	CI	62+40.06	15.53' LT	197.022	2	
I6–4	CB	CI	62+40.04	15.50' RT	197.021	2	

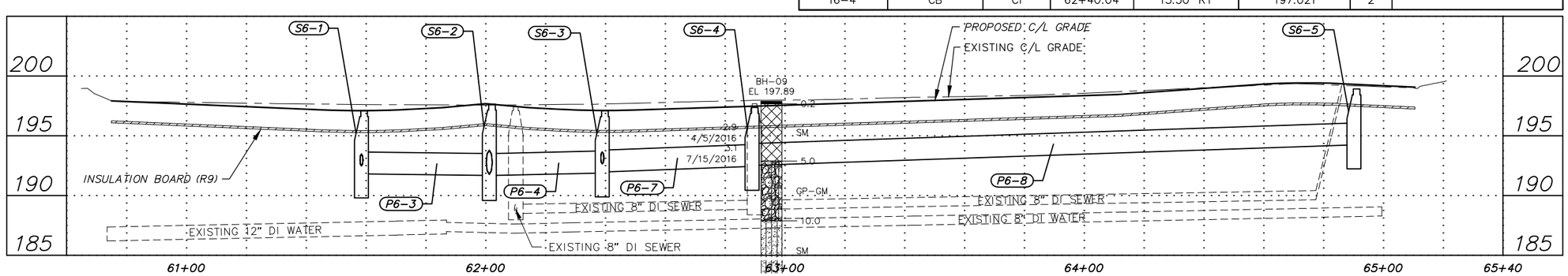

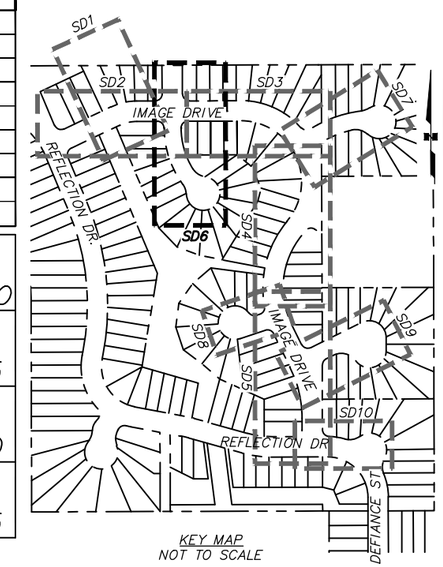

KEY MAP
NOT TO SCALE

RECORD DRAWING

1. DATA PROVIDED BY: _____ TITLE: _____
   THIS WILL SERVE TO CERTIFY THAT THESE RECORD DRAWINGS ARE A TRUE AND ACCURATE REPRESENTATION OF THE PROJECT AS CONSTRUCTED.
   CONTRACTOR: _____
   BY: _____ TITLE: _____ DATE: _____
2. DATA TRANSFERRED BY: _____ TITLE: _____
   COMPANY: _____ DATE: _____
3. BASED ON PERIODIC FIELD OBSERVATIONS BY THE ENGINEER (OR AN INDIVIDUAL UNDER HIS/HER DIRECT SUPERVISION), THE CONTRACTOR-PROVIDED DATA APPEARS TO REPRESENT THE PROJECT AS CONSTRUCTED.
   DATA TRANSFER CHECKED BY: _____ TITLE: _____
   COMPANY: _____ DATE: _____
   BY: _____

DATA	DRAWN BY	CHECKED BY
BASE	TS	MJ
TOPOGRAPHY	TS	MJ
PROFILE	RB	JK
STORM SEWER	JH	JK
WATER/SANITARY SEWER	MV	JK
GAS	MV	JK
TELEPHONE	MV	JK
ELECTRIC	TK	BM
DESIGN	RB	JK
QUANTITIES	RB	JK
PRELIMINARY/FINAL	RB	JK
MUNICIPAL/STATE	RB	JK

PLAN CHECK

GRAPHIC 40 20 0 20 40 SCALE

FIELD BOOKS	BM NO.	LOCATION	ELEV.
DESIGN CRW Books 147, 148, & 151	GAAB 66	See page D-24 of the MOA Benchmark Book	238.10
	GAAB 96	See page D-26 of the MOA Benchmark Book	313.83
STAKING			
ASBUILT			
CONTRACTOR	BASIS OF THIS DATUM GAAB 1972 ADJUST		
INSPECTOR			

CONSTRUCTION RECORD — VERTICAL DATUM

REV	DATE	DESCRIPTION	BY

REVISIONS

CRW ENGINEERING GROUP, LLC
3940 ARCTIC BLVD. SUITE 300
ANCHORAGE, ALASKA 99503
PHONE: (907) 562-3252
#AECL882-AK

CONSULTANT

STATE OF ALASKA 49TH Joseph C. Hegna CE-11770 REGISTERED PROFESSIONAL ENGINEER

SEAL

MUNICIPALITY OF ANCHORAGE

PROJECT MANAGEMENT AND ENGINEERING DEPARTMENT

14–50 IMAGE DRIVE / REFLECTION DRIVE AREA ROAD RECONSTRUCTION – PHASE 2 SCHED B

STORM DRAIN PLAN & PROFILE

MIRAGE CIRCLE

SCALE HOR. 1"=20' VER. 1"=5' | GRID SW1638, SW1738 | DATE SEPT 2019 | STATUS 65% | SHEET SD6 of SD14

File:J:\JobData\10133.00 Image Reflection Area Reconstruction\00 CADD\01 Working Set\01 Civil\Phase 2\10133.00 Plan & Profile – Storm Drain Side Streets – Phase 2.dwg

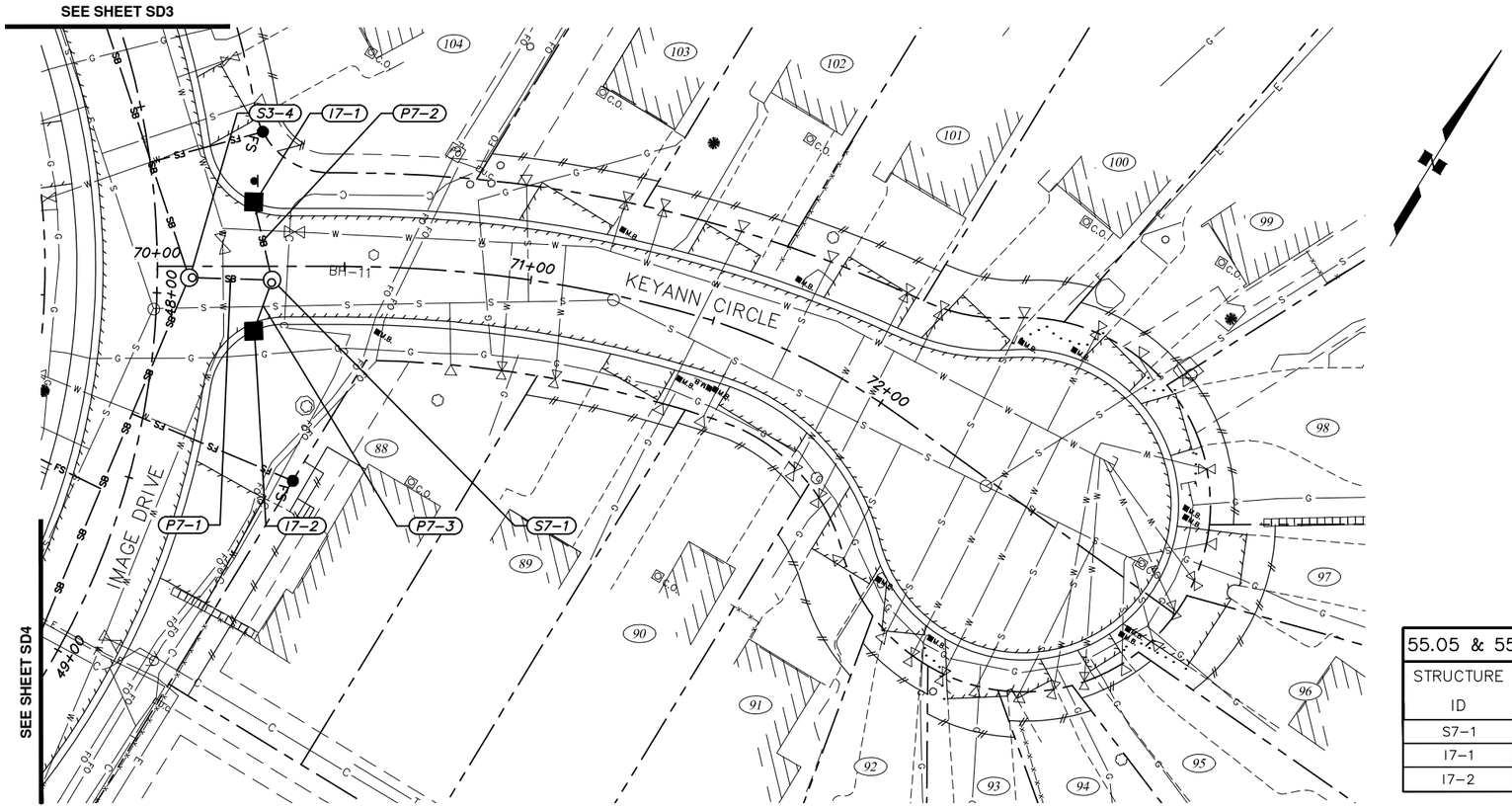

NOTES:

1. AN ASTERISK (*) DENOTES PIPE OR STRUCTURE NOT SHOWN IN PROFILE FOR CLARITY.
2. REFER TO SHEET SD11 FOR GENERAL STORM DRAIN STRUCTURE/PIPE NOTES AND STRUCTURE ABBREVIATIONS USED ON SUMMARY TABLES SHOWN ON THIS SHEET.
3. REFER TO SHEETS SD11–SD13 FOR STORM DRAIN DETAILS.

55.02 & 55.03 – STORM DRAIN & SUBDRAIN PIPE

PIPE NAME	SIZE (IN.)	PIPE TYPE	LENGTH (FT.)	FROM	TO	INLET ELEVATION	OUTLET ELEVATION	SLOPE
P7–1	18	SP	22.19	S7–1	S3–4	193.660	193.600	0.33%
P7–2	12	SP	21.40	I7–1	S7–1	194.000	193.710	1.67%
P7–3	12	SP	14.50	I7–2	S7–1	194.000	193.710	2.76%

55.05 & 55.09 – STORM DRAIN STRUCTURES

STRUCTURE ID	TYPE OF STRUCTURE	TYPE OF CASTING	STATION	OFFSET TO STRUCTURE C/L	TOP OF CASTING ELEVATION	CURB TYPE	COMMENTS
S7–1	MH I	MH	70+30.64	3.61' RT	198.566	N/A	
I7–1	CB	CI	70+25.76	17.23' LT	198.495	2	
I7–2	CB	CI	70+25.76	17.26' RT	198.496	2	

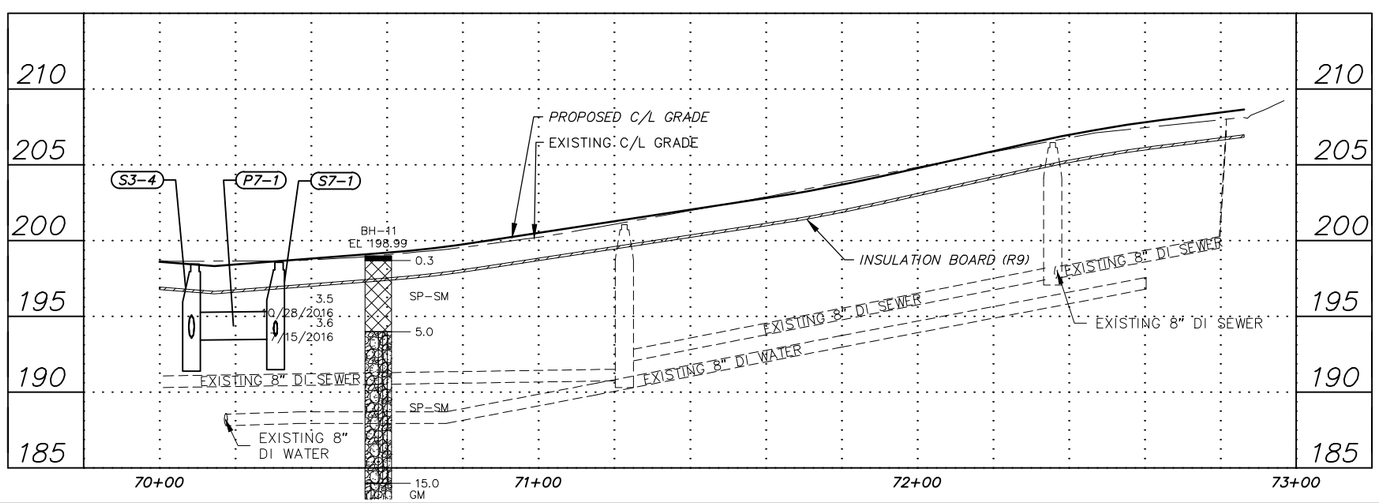

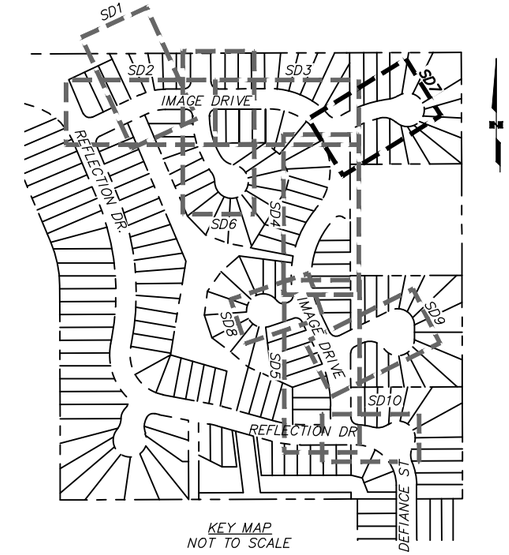

KEY MAP
NOT TO SCALE

RECORD DRAWING

1. DATA PROVIDED BY: _____ TITLE: _____
   THIS WILL SERVE TO CERTIFY THAT THESE RECORD DRAWINGS ARE A TRUE AND ACCURATE REPRESENTATION OF THE PROJECT AS CONSTRUCTED.
   CONTRACTOR: _____
   BY: _____ TITLE: _____ DATE: _____
2. DATA TRANSFERRED BY: _____ TITLE: _____
   COMPANY: _____ DATE: _____
3. BASED ON PERIODIC FIELD OBSERVATIONS BY THE ENGINEER (OR AN INDIVIDUAL UNDER HIS/HER DIRECT SUPERVISION), THE CONTRACTOR–PROVIDED DATA APPEARS TO REPRESENT THE PROJECT AS CONSTRUCTED.
   DATA TRANSFER CHECKED BY: _____ TITLE: _____
   COMPANY: _____ DATE: _____
   BY: _____

DATA	DRAWN BY	CHECKED BY
BASE	TS	MJ
TOPOGRAPHY	TS	MJ
PROFILE	RB	JK
STORM SEWER	JH	JK
WATER/SANITARY SEWER	MV	JK
GAS	MV	JK
TELEPHONE	MV	JK
ELECTRIC	TK	BM
DESIGN	RB	JK
QUANTITIES	RB	JK
PRELIMINARY/FINAL	RB	JK
MUNICIPAL/STATE	RB	JK

PLAN CHECK

GRAPHIC SCALE 40 20 0 20 40

FIELD BOOKS
DESIGN CRW Books 147, 148, & 151
STAKING
ASBUILT
CONTRACTOR
INSPECTOR

CONSTRUCTION RECORD

BM NO.	LOCATION	ELEV.
GAAB 66	See page D–24 of the MOA Benchmark Book	238.10
GAAB 96	See page D–26 of the MOA Benchmark Book	313.83

BASIS OF THIS DATUM GAAB 1972 ADJUST

VERTICAL DATUM

REV	DATE	DESCRIPTION	BY

REVISIONS

CRW ENGINEERING GROUP, LLC
3940 ARCTIC BLVD. SUITE 300
ANCHORAGE, ALASKA 99503
PHONE: (907) 562–3252
@ECL882–AK

CONSULTANT

STATE OF ALASKA 49 TH Joseph C. Hegna CE-11770 REGISTERED PROFESSIONAL ENGINEER

SEAL

MUNICIPALITY OF ANCHORAGE

PROJECT MANAGEMENT AND ENGINEERING DEPARTMENT

14–50 IMAGE DRIVE / REFLECTION DRIVE AREA ROAD RECONSTRUCTION – PHASE 2 SCHED B

STORM DRAIN PLAN & PROFILE

KEYANN CIRCLE

SCALE HOR. 1"=20' VER. 1"=5'

GRID SW1638, SW1738

DATE SEPT 2019

STATUS 65%

SHEET SD7 of SD14

File: J:\JobsData\10133.00 Image Reflection Area Reconstruction\00 CADD\01 Working Set\01 Civil\Phase 2\10133.00 Plan & Profile – Storm Drain Side Streets – Phase 2.dwg

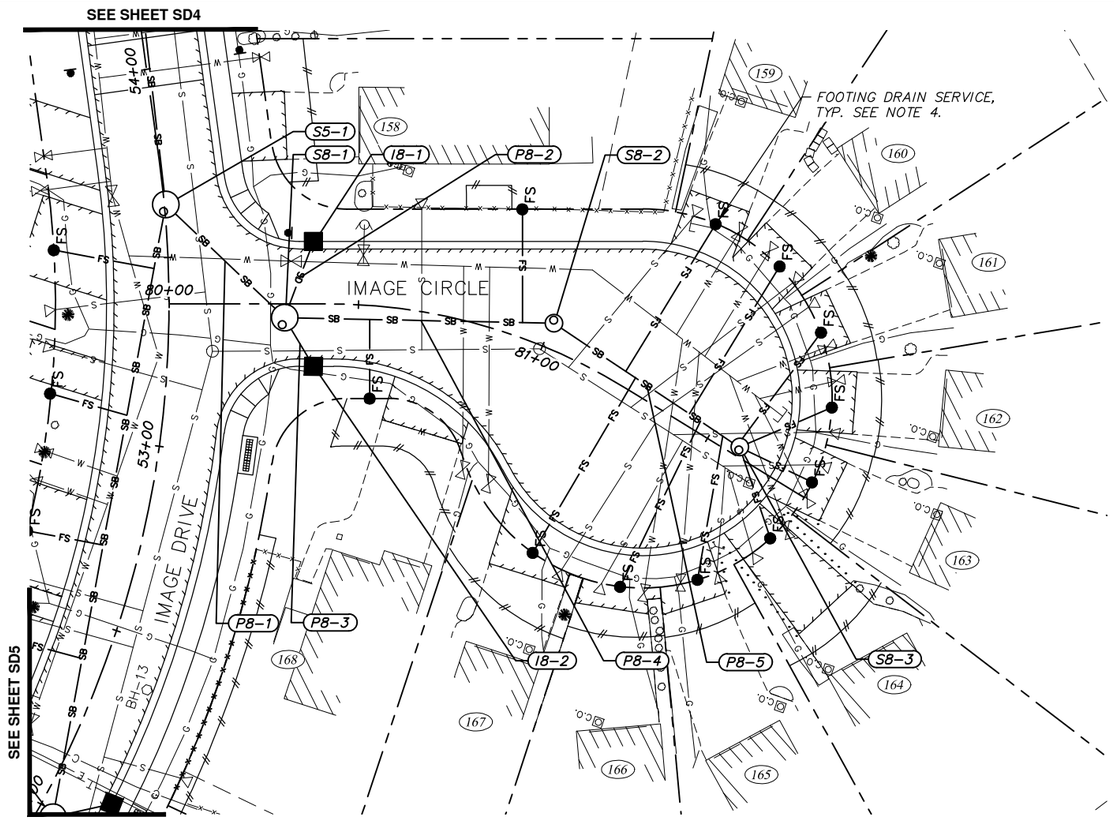

NOTES:

1. AN ASTERISK (*) DENOTES PIPE OR STRUCTURE NOT SHOWN IN PROFILE FOR CLARITY.
2. REFER TO SHEET SD11 FOR GENERAL STORM DRAIN STRUCTURE/PIPE NOTES AND STRUCTURE ABBREVIATIONS USED ON SUMMARY TABLES SHOWN ON THIS SHEET.
3. REFER TO SHEETS SD11–SD13 FOR STORM DRAIN DETAILS.
4. REFER TO SHEET SD14 FOR FOOTING DRAIN SERVICE SUMMARY TABLE.

55.05 & 55.09 – STORM DRAIN STRUCTURES

STRUCTURE ID	TYPE OF STRUCTURE	TYPE OF CASTING	STATION	OFFSET TO STRUCTURE C/L	TOP OF CASTING ELEVATION	CURB TYPE	COMMENTS
S8–1	MH II	MH	80+30.46	3.64' RT	200.903	N/A	
S8–2	MH I	MH	81+01.56	5.12' RT	201.730	N/A	
S8–3	MH I	MH	81+50.61	37.81' RT	202.097	N/A	
I8–1	CB	CI	80+38.09	16.50' LT	200.819	2	
I8–2	CB	CI	80+38.09	16.50' RT	200.819	2	

55.02 & 55.03 – STORM DRAIN & SUBDRAIN PIPE

PIPE NAME	SIZE (IN.)	PIPE TYPE	LENGTH (FT.)	FROM	TO	INLET ELEVATION	OUTLET ELEVATION	SLOPE
P8–1	12	SP	43.29	S8–1	S5–1	196.450	196.330	0.32%
P8–2	12	S	21.54	I8–1	S8–1	196.500	196.450	0.30%
P8–3	12	S	14.95	I8–2	S8–1	196.510	196.480	0.30%
P8–4	12	SP	71.11	S8–2	S8–1	197.020	196.570	0.68%
P8–5	12	SP	58.95	S8–3	S8–2	197.240	197.070	0.31%

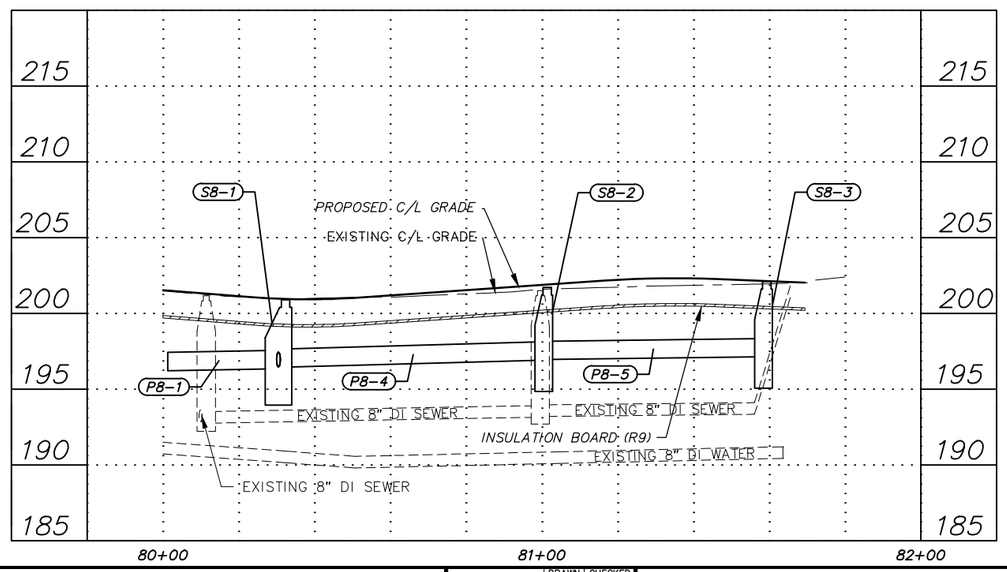

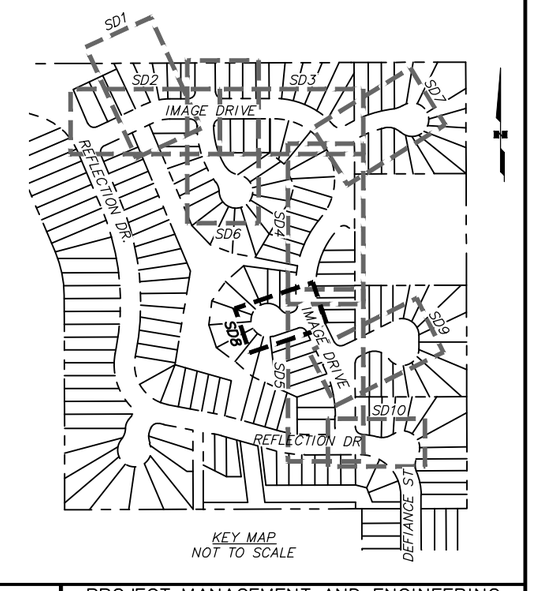

KEY MAP
NOT TO SCALE

RECORD DRAWING

1. DATA PROVIDED BY: _____ TITLE: _____
   THIS WILL SERVE TO CERTIFY THAT THESE RECORD DRAWINGS ARE A TRUE AND ACCURATE REPRESENTATION OF THE PROJECT AS CONSTRUCTED.
   CONTRACTOR: _____
   BY: _____ TITLE: _____ DATE: _____
2. DATA TRANSFERRED BY: _____ TITLE: _____
   COMPANY: _____ DATE: _____
3. BASED ON PERIODIC FIELD OBSERVATIONS BY THE ENGINEER (OR AN INDIVIDUAL UNDER HIS/HER DIRECT SUPERVISION), THE CONTRACTOR–PROVIDED DATA APPEARS TO REPRESENT THE PROJECT AS CONSTRUCTED.
   DATA TRANSFER CHECKED BY: _____ TITLE: _____
   COMPANY: _____ DATE: _____
   BY: _____

DATA	DRAWN BY	CHECKED BY
BASE	TS	MJ
TOPOGRAPHY	TS	MJ
PROFILE	RB	JK
STORM SEWER	JH	JK
WATER/SANITARY SEWER	MV	JK
GAS	MV	JK
TELEPHONE	MV	JK
ELECTRIC	TK	BM
DESIGN	RB	JK
QUANTITIES	RB	JK
PRELIMINARY/FINAL	RB	JK
MUNICIPAL/STATE	RB	JK

PLAN CHECK

GRAPHIC 40 20 0 20 40 SCALE

FIELD BOOKS	BM NO.	LOCATION	ELEV.
DESIGN CRW Books 147, 148, & 151	GAAB 66	See page D–24 of the MOA Benchmark Book	238.10
	GAAB 96	See page D–26 of the MOA Benchmark Book	313.83
STAKING			
ASBUILT			
CONTRACTOR	BASIS OF THIS DATUM GAAB 1972 ADJUST		
INSPECTOR			

CONSTRUCTION RECORD — VERTICAL DATUM

REV	DATE	DESCRIPTION	BY

REVISIONS

CRW ENGINEERING GROUP, LLC
3940 ARCTIC BLVD. SUITE 300
ANCHORAGE, ALASKA 99503
PHONE: (907) 562–3252
#AECL882–AK

CONSULTANT

STATE OF ALASKA 49 TH Joseph C. Hegna CE-11770 REGISTERED PROFESSIONAL ENGINEER

SEAL

MUNICIPALITY OF ANCHORAGE

PROJECT MANAGEMENT AND ENGINEERING DEPARTMENT

14–50 IMAGE DRIVE / REFLECTION DRIVE AREA ROAD RECONSTRUCTION – PHASE 2 SCHED B

STORM DRAIN PLAN & PROFILE

IMAGE CIRCLE

SCALE HOR. 1"=20' VER. 1"=5' | GRID SW1638, SW1738 | DATE SEPT 2019 | STATUS 65% | SHEET SD8 of SD14

File: J:\JobsData\10133.00 Image Reflection Area Reconstruction\00 CADD\01 Working Set\01 Civil\Phase 2\10133.00 Plan & Profile – Storm Drain Side Streets – Phase 2.dwg

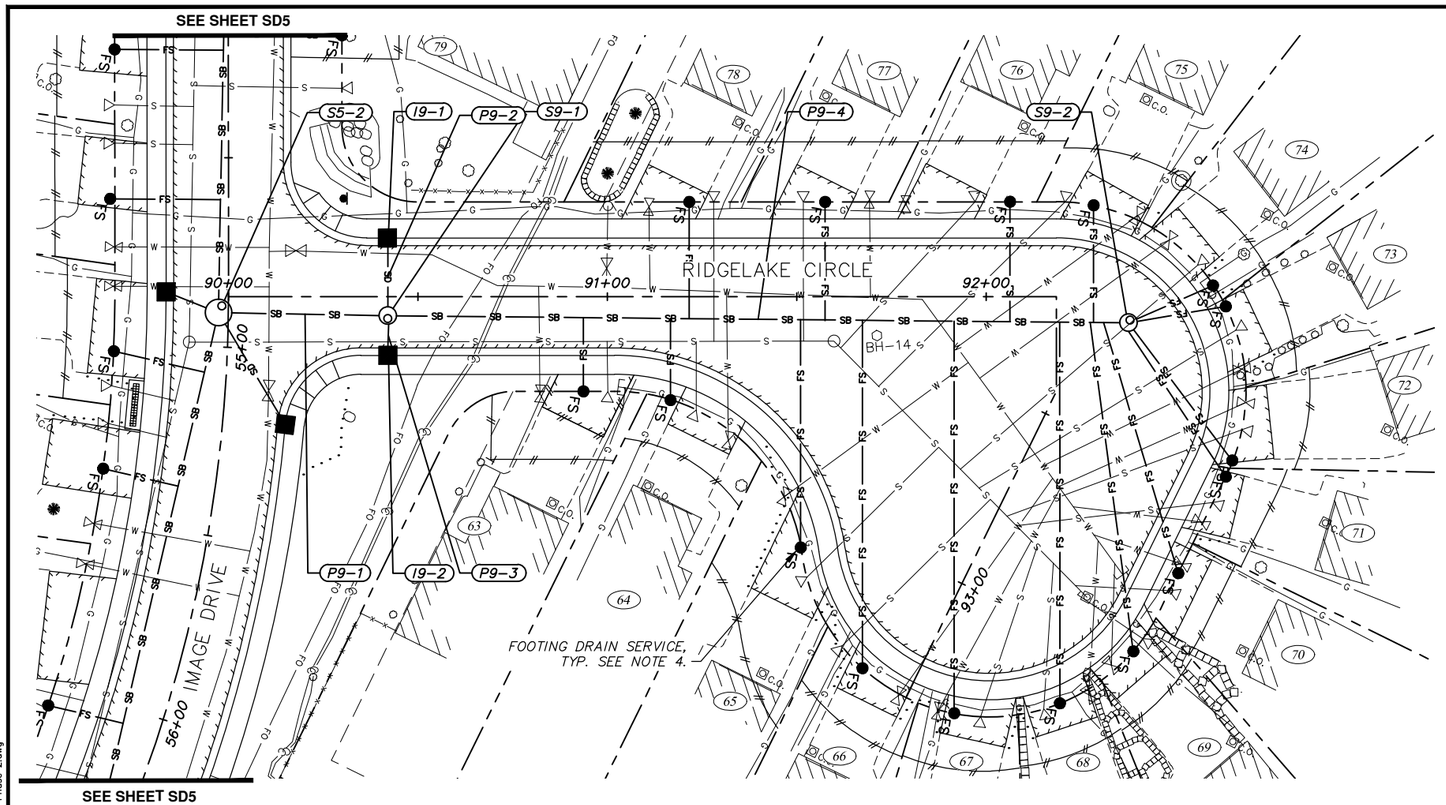

NOTES:

1. AN ASTERISK (*) DENOTES PIPE OR STRUCTURE NOT SHOWN IN PROFILE FOR CLARITY.
2. REFER TO SHEET SD11 FOR GENERAL STORM DRAIN STRUCTURE/PIPE NOTES AND STRUCTURE ABBREVIATIONS USED ON SUMMARY TABLES SHOWN ON THIS SHEET.
3. REFER TO SHEETS SD11–SD13 FOR STORM DRAIN DETAILS.
4. REFER TO SHEET SD14 FOP FOOTING DRAIN SERVICE SUMMARY TABLE.

55.05 & 55.09 – STORM DRAIN STRUCTURES

STRUCTURE ID	TYPE OF STRUCTURE	TYPE OF CASTING	STATION	OFFSET TO STRUCTURE C/L	TOP OF CASTING ELEVATION	CURB TYPE	COMMENTS
S9–1	MH I	MH	90+42.01	5.01' RT	201.823	N/A	
S9–2	MH I	MH	92+25.40	19.03' LT	204.236	N/A	
I9–1	CB	CI	90+41.91	15.50' LT	201.825	2	
I9–2	CB	CI	90+42.05	15.47' RT	201.824	2	

55.02 & 55.03 – STORM DRAIN & SUBDRAIN PIPE

PIPE NAME	SIZE (IN.)	PIPE TYPE	LENGTH (FT.)	FROM	TO	INLET ELEVATION	OUTLET ELEVATION	SLOPE
P9–1	12	SP	44.71	S9–1	S5–2	197.25	197.130	0.30%
P9–2	12	S	20.52	I9–1	S9–1	197.48	197.400	0.48%
P9–3	12	S	10.48	I9–2	S9–1	197.5	197.400	1.54%
P9–4	12	SP	195.54	S9–2	S9–1	198.270	197.400	0.45%

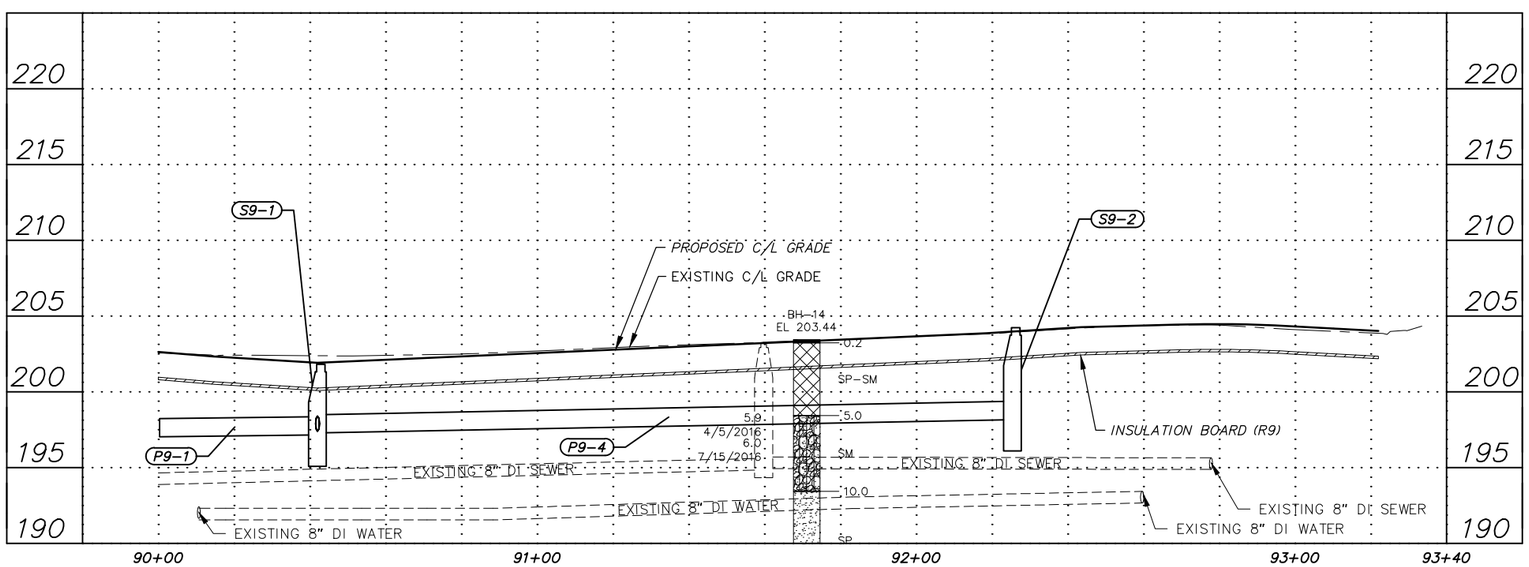

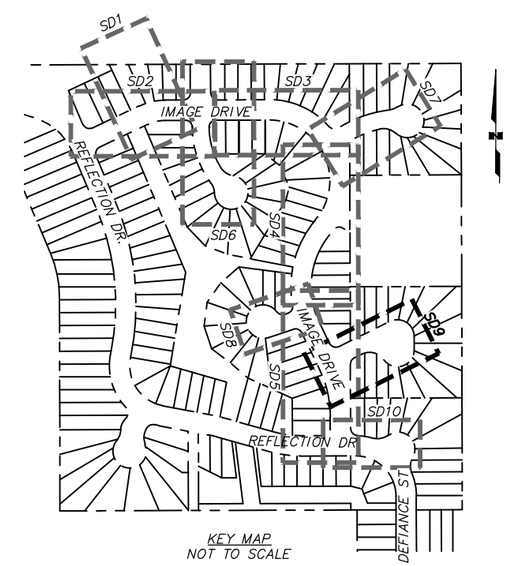

KEY MAP
NOT TO SCALE

RECORD DRAWING

1. DATA PROVIDED BY: _____ TITLE: _____
   THIS WILL SERVE TO CERTIFY THAT THESE RECORD DRAWINGS ARE A TRUE AND ACCURATE REPRESENTATION OF THE PROJECT AS CONSTRUCTED.
   CONTRACTOR: _____
   BY: _____ TITLE: _____ DATE: _____
2. DATA TRANSFERRED BY: _____ TITLE: _____
   COMPANY: _____ DATE: _____
3. BASED ON PERIODIC FIELD OBSERVATIONS BY THE ENGINEER (OR AN INDIVIDUAL UNDER HIS/HER DIRECT SUPERVISION), THE CONTRACTOR-PROVIDED DATA APPEARS TO REPRESENT THE PROJECT AS CONSTRUCTED.
   DATA TRANSFER CHECKED BY: _____ TITLE: _____
   COMPANY: _____ DATE: _____
   BY: _____

DATA	DRAWN BY	CHECKED BY
BASE	TS	MJ
TOPOGRAPHY	TS	MJ
PROFILE	RB	JK
STORM SEWER	JH	JK
WATER/SANITARY SEWER	MV	JK
GAS	MV	JK
TELEPHONE	MV	JK
ELECTRIC	TK	BM
DESIGN	RB	JK
QUANTITIES	RB	JK
PRELIMINARY/FINAL	RB	JK
MUNICIPAL/STATE	RB	JK

PLAN CHECK

GRAPHIC 40 20 0 20 40 SCALE

FIELD BOOKS	BM NO.	LOCATION	ELEV.
DESIGN CRW Books 147, 148, & 151	GAAB 66	See page D–24 of the MOA Benchmark Book	238.10
	GAAB 96	See page D–26 of the MOA Benchmark Book	313.83
STAKING			
ASBUILT			
CONTRACTOR	BASIS OF THIS DATUM GAAB 1972 ADJUST		
INSPECTOR			

CONSTRUCTION RECORD — VERTICAL DATUM

REV	DATE	DESCRIPTION	BY

REVISIONS

CRW ENGINEERING GROUP, LLC
3940 ARCTIC BLVD. SUITE 300
ANCHORAGE, ALASKA 99503
PHONE: (907) 562–3252
#AECL882–AK

CONSULTANT

STATE OF ALASKA 49TH Joseph C. Hegna CE-11770 REGISTERED PROFESSIONAL ENGINEER

SEAL

MUNICIPALITY OF ANCHORAGE

PROJECT MANAGEMENT AND ENGINEERING DEPARTMENT

14–50 IMAGE DRIVE / REFLECTION DRIVE AREA ROAD RECONSTRUCTION – PHASE 2 SCHED B

STORM DRAIN PLAN & PROFILE

RIDGELAKE CIRCLE

SCALE HOR. 1"=20' VER. 1"=5' | GRID SW1638, SW1738 | DATE SEPT 2019 | STATUS 65% | SHEET SD9 of SD14

File:J:\JobsData\10133.00 Image Reflection Area Reconstruction\00 CADD\01 Working Set\01 Civil\Phase 2\10133.00 Plan & Profile – Storm Drain Side Streets – Phase 2.dwg

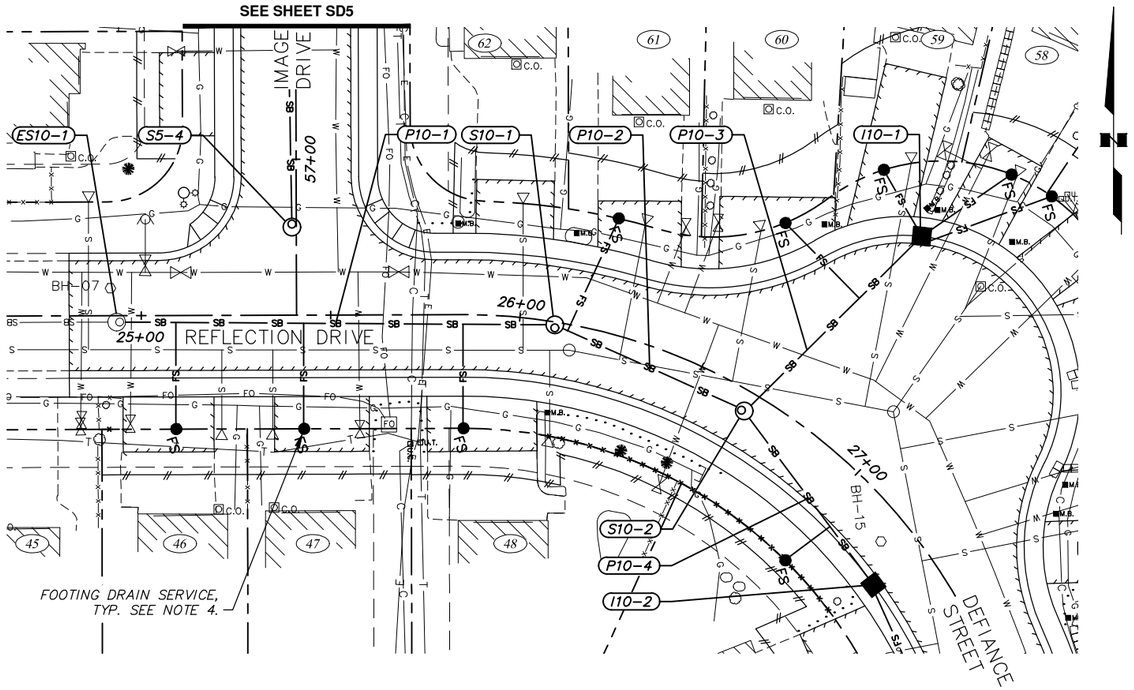

NOTES:

1. *AN ASTERISK (*) DENOTES PIPE OR STRUCTURE NOT SHOWN IN PROFILE FOR CLARITY.*
2. *REFER TO SHEET SD11 FOR GENERAL STORM DRAIN STRUCTURE/PIPE NOTES AND STRUCTURE ABBREVIATIONS USED ON SUMMARY TABLES SHOWN ON THIS SHEET.*
3. *REFER TO SHEETS SD11–SD13 FOR STORM DRAIN DETAILS.*
4. *REFER TO SHEET SD14 FOR FOOTING DRAIN SERVICE SUMMARY TABLE.*

55.02 & 55.03 – STORM DRAIN & SUBDRAIN PIPE

PIPE NAME	SIZE (IN.)	PIPE TYPE	LENGTH (FT.)	FROM	TO	INLET ELEVATION	OUTLET ELEVATION	SLOPE
P10–1	18	SP	117.65	S10–1	S5–3	200.400	199.330	0.96%
P10–2	18	SP	55.23	S10–2	S10–1	202.400	200.500	3.71%
P10–3	18	SP	65.80	I10–1	S10–2	202.700	202.500	0.32%
P10–4	18	SP	57.26	I10–2	S10–2	205.380	202.500	5.41%

55.05 & 55.09 – STORM DRAIN STRUCTURES

STRUCTURE ID	TYPE OF STRUCTURE	TYPE OF CASTING	STATION	OFFSET TO STRUCTURE C/L	TOP OF CASTING ELEVATION	CURB TYPE	COMMENTS
ES10–1	CONNECT	MH	24+93.52	1.68' RT	204.05	N/A	EXISTING STRUCTURE
S10–1	MH I	MH	26+09.38	0.81' RT	205.449	N/A	
S10–2	MH I	MH	26+65.62	5.28' RT	207.380	N/A	
I10–1	CB	CI	26+77.71	58.98' LT	207.652	2	
I10–2	CB	CI	27+26.52	16.50' RT	211.212	2	

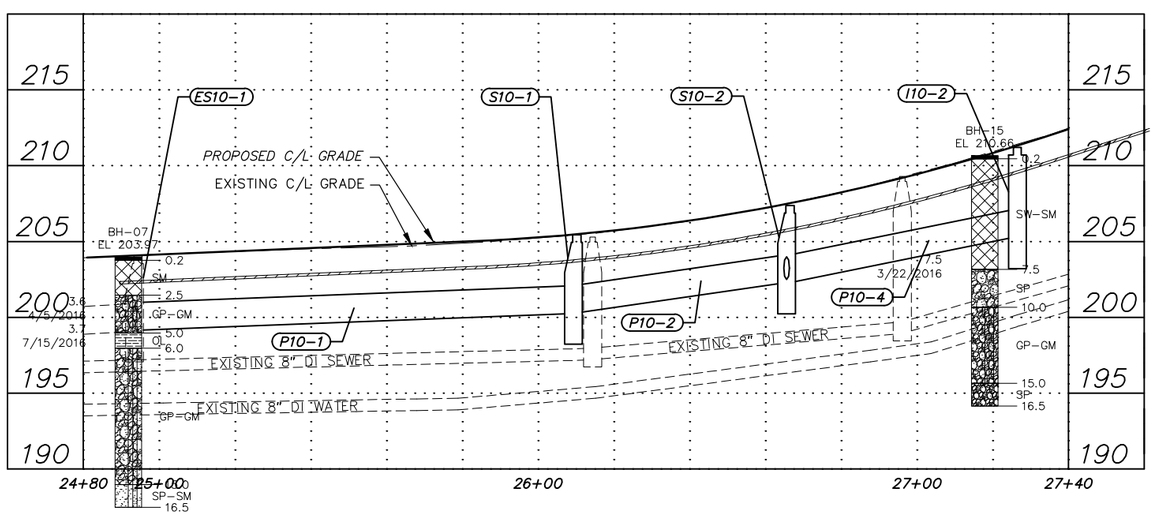

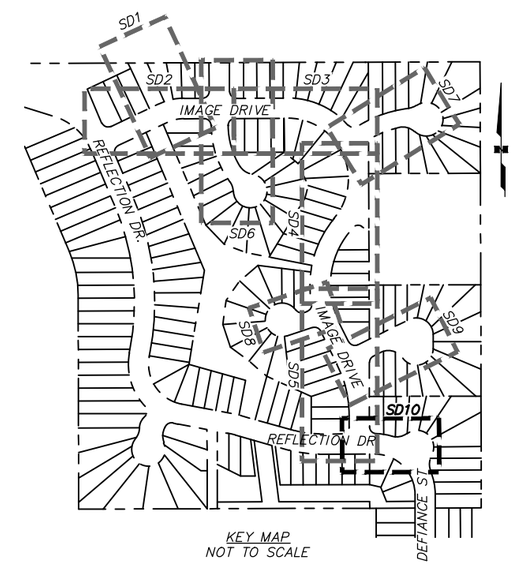

KEY MAP
NOT TO SCALE

RECORD DRAWING

1. DATA PROVIDED BY: _____ TITLE: _____
   THIS WILL SERVE TO CERTIFY THAT THESE RECORD DRAWINGS ARE A TRUE AND ACCURATE REPRESENTATION OF THE PROJECT AS CONSTRUCTED.
   CONTRACTOR: _____
   BY: _____ TITLE: _____ DATE: _____
2. DATA TRANSFERRED BY: _____ TITLE: _____
   COMPANY: _____ DATE: _____
3. BASED ON PERIODIC FIELD OBSERVATIONS BY THE ENGINEER (OR AN INDIVIDUAL UNDER HIS/HER DIRECT SUPERVISION), THE CONTRACTOR–PROVIDED DATA APPEARS TO REPRESENT THE PROJECT AS CONSTRUCTED.
   DATA TRANSFER CHECKED BY: _____ TITLE: _____
   COMPANY: _____ DATE: _____
   BY: _____

DATA	DRAWN BY	CHECKED BY
BASE	TS	MJ
TOPOGRAPHY	TS	MJ
PROFILE	RB	JK
STORM SEWER	JH	JK
WATER/SANITARY SEWER	MV	JK
GAS	MV	JK
TELEPHONE	MV	JK
ELECTRIC	TK	BM
DESIGN	RB	JK
QUANTITIES	RB	JK
PRELIMINARY/FINAL	RB	JK
MUNICIPAL/STATE	RB	JK

PLAN CHECK

GRAPHIC 40 20 0 20 40 SCALE

FIELD BOOKS	BM NO.	LOCATION	ELEV.
DESIGN CRW Books 147, 148, & 151	GAAB 66	See page D–24 of the MOA Benchmark Book	238.10
	GAAB 96	See page D–26 of the MOA Benchmark Book	313.83
STAKING			
ASBUILT			
CONTRACTOR	BASIS OF THIS DATUM GAAB 1972 ADJUST		
INSPECTOR			

CONSTRUCTION RECORD — VERTICAL DATUM

REV	DATE	DESCRIPTION	BY

REVISIONS

CRW ENGINEERING GROUP, LLC
3940 ARCTIC BLVD. SUITE 300
ANCHORAGE, ALASKA 99503
PHONE: (907) 562–3252
#AECL882–AK

CONSULTANT

STATE OF ALASKA 49TH Joseph C. Hegna CE-11770 REGISTERED PROFESSIONAL ENGINEER

SEAL

MUNICIPALITY OF ANCHORAGE

PROJECT MANAGEMENT AND ENGINEERING DEPARTMENT

14–50 IMAGE DRIVE / REFLECTION DRIVE AREA ROAD RECONSTRUCTION – PHASE 2 SCHED B

STORM DRAIN PLAN & PROFILE

REFLECTION DRIVE & DEFIANCE STREET

SCALE HOR. 1"=20' VER. 1"=5' | GRID SW1638, SW1738 | DATE SEPT 2019 | STATUS 65% | SHEET SD10 of SD14

File:J:\JobsData\10133.00 Image Reflection Area Reconstruction\00 CADD\01 Working Set\01 Civil\Phase 2\10133.00 Plan & Profile – Storm Drain – Phase 2.dwg

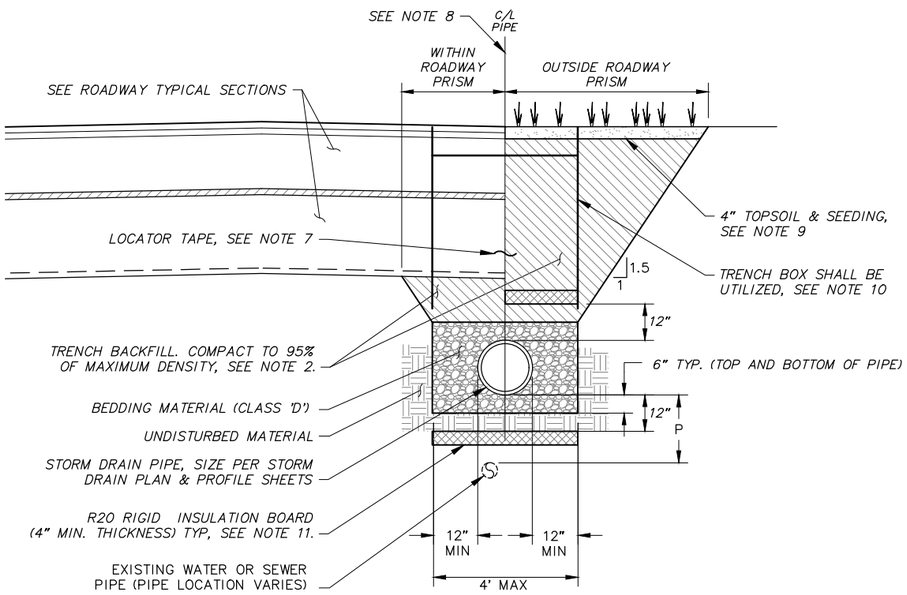

1 TYPICAL STORM DRAIN TRENCH SECTION

SCALE: NTS

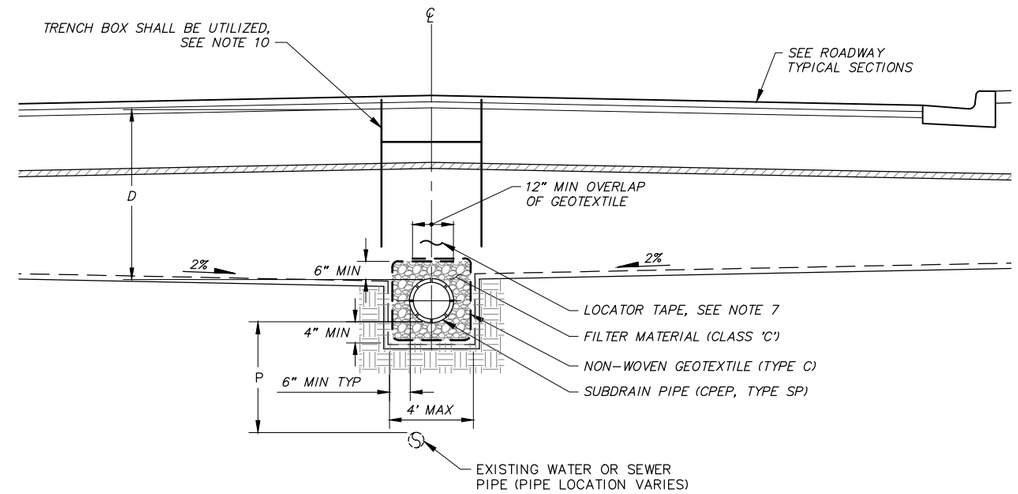

2 TYPICAL SUBDRAIN TRENCH SECTION

SCALE: NTS

STORM DRAIN & SUBDRAIN TRENCH SECTION NOTES:

1. TRENCH EXCAVATION AND SHORING SHALL COMPLY WITH ALL LOCAL, STATE, AND OSHA REGULATIONS AND REQUIREMENTS. INDICATED TRENCH WALL SLOPES AND DIMENSIONS ARE FOR PAY QUANTITY DETERMINATIONS ONLY.
2. TRENCH BACKFILL SHALL BE NATIVE MATERIAL MEETING TYPE III CLASSIFICATION (MINIMUM) AS APPROVED BY THE ENGINEER. NATIVE MATERIAL NOT MEETING TYPE III CLASSIFICATION SHALL BE REMOVED AND REPLACED WITH TYPE II CLASSIFIED MATERIAL.
3. REMOVE AND DISPOSE OF ALL ORGANIC MATERIALS IN ACCORDANCE WITH MASS SECTION 20.13.
4. IN PREPARATION FOR AND IMMEDIATELY PRIOR TO PAVING, CONTRACTOR SHALL SAW CUT AND REMOVE AN ADDITIONAL 12 INCHES FROM EXISTING PAVEMENT EDGE. THE ENGINEER MAY REQUIRE MORE THAN 12 INCHES ADDITIONAL CUT IF THE EXISTING PAVEMENT HAS BEEN LIFTED IN THE REMOVAL PROCESS, IF THE JOINT DOES NOT OCCUR ON UNDISTURBED MATERIAL, OR IF THE JOINT IS LOCATED WITHIN THE TRAVEL LANE.
5. WATER LINES CROSSING STORM DRAIN LINES REQUIRE A MINIMUM VERTICAL SEPARATION OF THREE (3) FEET. INSTALL R20 INSULATION BOARD WHEN 'P' IS LESS THAN 3', AS MEASURED FROM OUTSIDE OF PIPES & WITHIN BEDDING LIMITS, OR AS DIRECTED BY ENGINEER IN FIELD. EIGHTEEN (18) INCHES IS THE MINIMUM INSULATED SEPARATION DISTANCE. IF EIGHTEEN (18) INCHES CAN NOT BE OBTAINED, THE WATER LINE WILL HAVE TO BE RELOCATED.
6. WHERE WATER AND STORM DRAIN MAINS CROSS, STORM DRAIN MAIN JOINTS SHALL BE AT LEAST 10 FEET FROM WATER MAIN JOINTS.
7. INSTALL DETECTABLE LOCATOR TAPE THREE (3) FEET BELOW FINISH GRADE OR TWO (2) FEET DEEP IN THE STREET STRUCTURAL SECTION PER MASS SECTION 20.13.
8. LOCATION OF STORM DRAIN VARIES WITHIN ROADWAY. INSTALL STORM DRAIN AS SHOWN ON STORM DRAIN PLAN & PROFILE SHEETS.
9. PLACE 4" OF TOPSOIL AND SEEDING (SCHEDULE A) ON ALL DISTURBED AREAS.
10. TRENCH BOX SHALL BE UTILIZED TO MINIMIZE TRENCH WIDTH AND REDUCE IMPACTS TO ADJACENT PROPERTIES AND RE-VEGETATION. CONTRACTOR SHALL TAKE EXTRA PRECAUTIONS TO AVOID IMPACTS TO TREE PROTECTION ZONES.
11. INSTALL R20 INSULATION BOARD WHEN:
    - 'D' IS IS LESS THAN 4' IN AREAS OUTSIDE OF IMAGE DRIVE INSULATED ROADWAY SECTION, INSULATION PLACEMENT SHALL CONFORM TO MASS DETAIL 20-9.
    - 'P' IS LESS THAN 3', AS MEASURED FROM OUTSIDE OF PIPES & WITHIN BEDDING LIMITS, OR AS DIRECTED BY ENGINEER IN THE FIELD.

GENERAL STORM DRAIN STRUCTURE & PIPE NOTES:

1. HORIZONTAL AND VERTICAL CONTROL POINTS FOR STORM DRAIN STRUCTURES (REFERENCE POINTS CALLED OUT IN PLAN & PROFILE SHEETS) ARE:

STRUCTURE	HORZ CONTROL	REFERENCE ELEV.
TYPE I MH	CENTER OF MH	FG/TOP OF LID.
TYPE II MH	CENTER OF MH	FG/TOP OF LID.
TYPE II CBMH	CENTER OF MH	TBC @ MID. PT. OF CURB INLET HOOD
CATCH BASIN	CENTER OF CB	TBC @ MID. PT. OF CURB INLET HOOD
CB W/ FIELD INLET	CENTER OF CB	FG/TOP OF FRAME

2. PIPE LENGTHS ARE BASED ON THE HORIZONTAL DISTANCE BETWEEN THE CENTER OF CONNECTING STRUCTURES OR FITTINGS. PIPE SLOPES ARE CALCULATED USING THE ACTUAL LENGTH OF PIPE FROM THE INSIDE FACE OF STRUCTURES.
3. UNLESS OTHERWISE NOTED ALL STORM DRAIN MAIN PIPE SHALL BE CPEP, TYPE SP. SEE LINES NEAR BASIN FOR EXCEPTIONS. CATCH BASIN LEADS WILL BE CPEP, TYPE S.
4. THE FOLLOWING ABBREVIATIONS USED ON THE STORM DRAIN STRUCTURE TABLES ON THE PLAN & PROFILES SHEETS ARE DESCRIBED BELOW:
    - CB – CATCH BASIN
    - CB (RED) – REDUCED HEIGHT CATCH BASIN
    - CB MH II – CATCH BASIN MANHOLE, TYPE II
    - MH I – STORM DRAIN MANHOLE, TYPE I
    - MH II – STORM DRAIN MANHOLE, TYPE II
    - OGS – OIL AND GRIT SEPARATOR
    - CONNECT – CONNECT TO STORM DRAIN MANHOLE
    - C.I. – CURB INLET
    - MH – MANHOLE FRAME AND LID

RECORD DRAWING

1. DATA PROVIDED BY: _____ TITLE: _____
   THIS WILL SERVE TO CERTIFY THAT THESE RECORD DRAWINGS ARE A TRUE AND ACCURATE REPRESENTATION OF THE PROJECT AS CONSTRUCTED.
   CONTRACTOR: _____
   BY: _____ TITLE: _____ DATE: _____
2. DATA TRANSFERRED BY: _____ TITLE: _____
   COMPANY: _____ DATE: _____
3. BASED ON PERIODIC FIELD OBSERVATIONS BY THE ENGINEER (OR AN INDIVIDUAL UNDER HIS/HER DIRECT SUPERVISION), THE CONTRACTOR-PROVIDED DATA APPEARS TO REPRESENT THE PROJECT AS CONSTRUCTED.
   DATA TRANSFER CHECKED BY: _____ TITLE: _____
   COMPANY: _____ DATE: _____
   BY: _____

DATA	DRAWN BY	CHECKED BY
BASE	TS	MJ
TOPOGRAPHY	TS	MJ
PROFILE	RB	JK
STORM SEWER	JH	JK
WATER/SANITARY SEWER	MV	JK
GAS	MV	JK
TELEPHONE	MV	JK
ELECTRIC	TK	BM
DESIGN	RB	JK
QUANTITIES	RB	JK
PRELIMINARY/FINAL	RB	JK
MUNICIPAL/STATE	RB	JK

PLAN CHECK

FIELD BOOKS	BM NO.	LOCATION	ELEV.
DESIGN CRW Books 147, 148, & 151	GAAB 66	See page D-24 of the MOA Benchmark Book	238.10
	GAAB 96	See page D-26 of the MOA Benchmark Book	313.83
STAKING			
ASBUILT			
CONTRACTOR	BASIS OF THIS DATUM GAAB 1972 ADJUST		
INSPECTOR			

CONSTRUCTION RECORD — VERTICAL DATUM

REV	DATE	DESCRIPTION	BY

REVISIONS

CRW ENGINEERING GROUP, LLC
3940 ARCTIC BLVD. SUITE 300
ANCHORAGE, ALASKA 99503
PHONE: (907) 562-3252
#AECL882-AK

CONSULTANT

STATE OF ALASKA 49 TH Joseph C. Hegna CE-11770 REGISTERED PROFESSIONAL ENGINEER

SEAL

MUNICIPALITY OF ANCHORAGE

PROJECT MANAGEMENT AND ENGINEERING DEPARTMENT

14-50 IMAGE DRIVE / REFLECTION DRIVE AREA ROAD RECONSTRUCTION – PHASE 2 SCHED B

STORM DRAIN DETAILS

SCALE HOR. 1"=20' VER. 1"=5' | GRID SW1638, SW1738 | DATE SEPT 2019 | STATUS 65% | SHEET SD11 of SD14

File:J:\JobData\10133.00 Image Reflection Area Reconstruction\00 CADD\01 Working Set\01 Civil\Phase 2\10133.00 Details – Storm – Phase 2.dwg

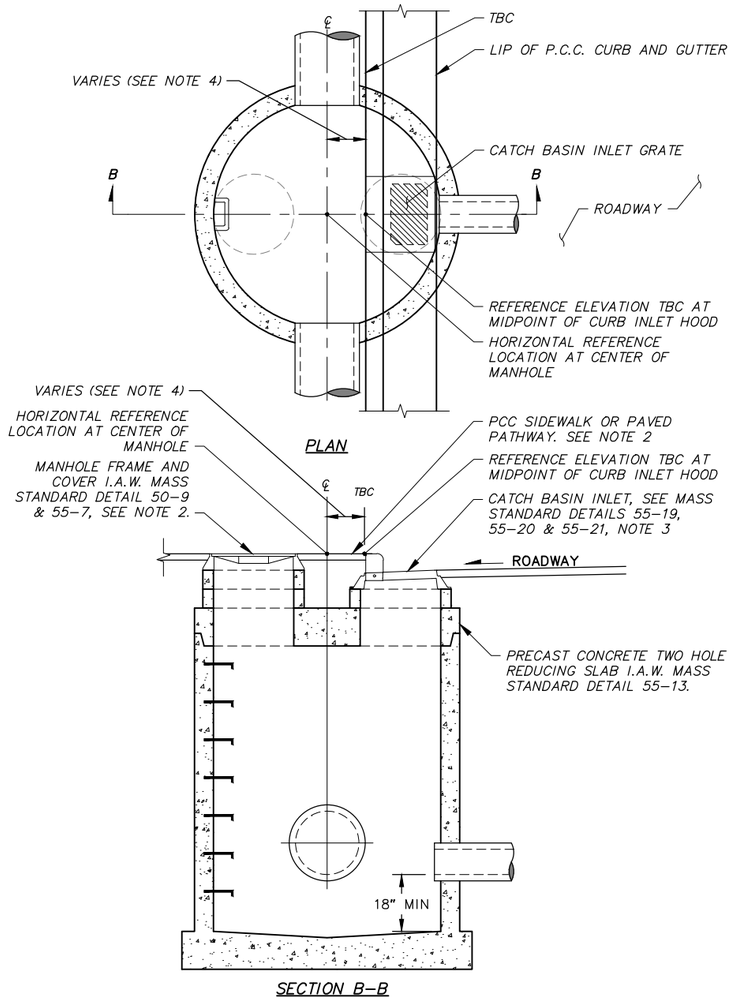

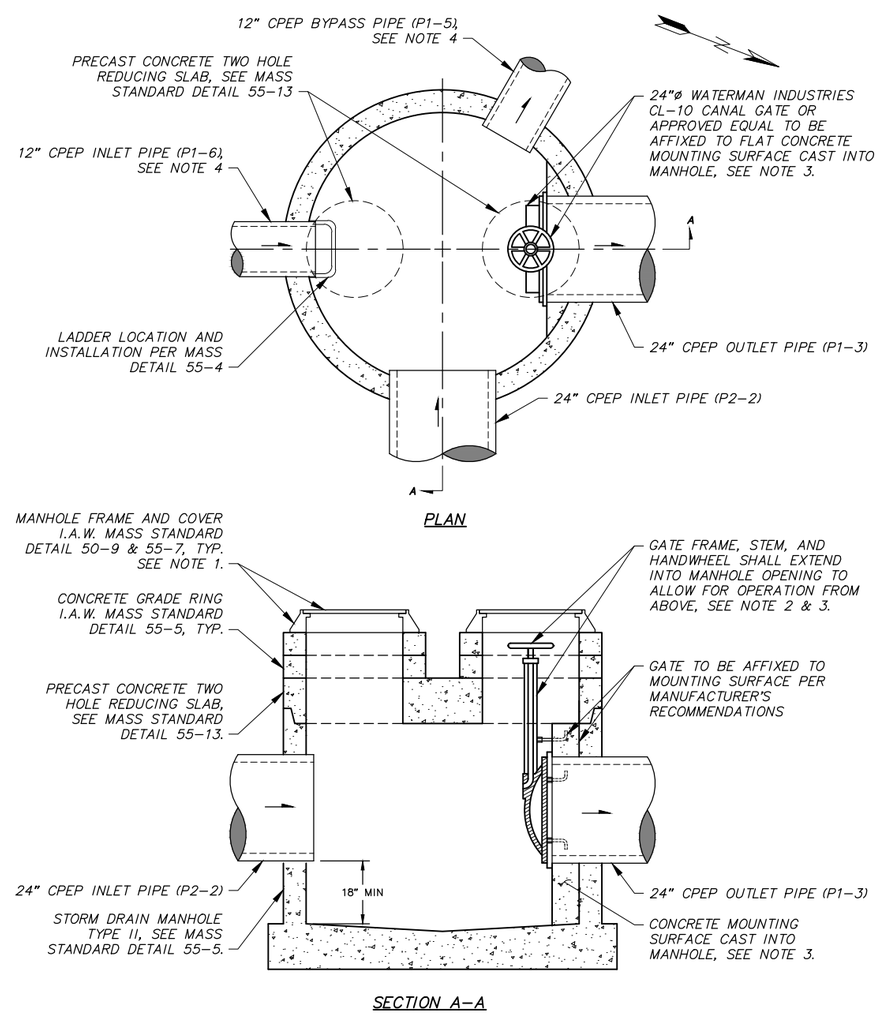

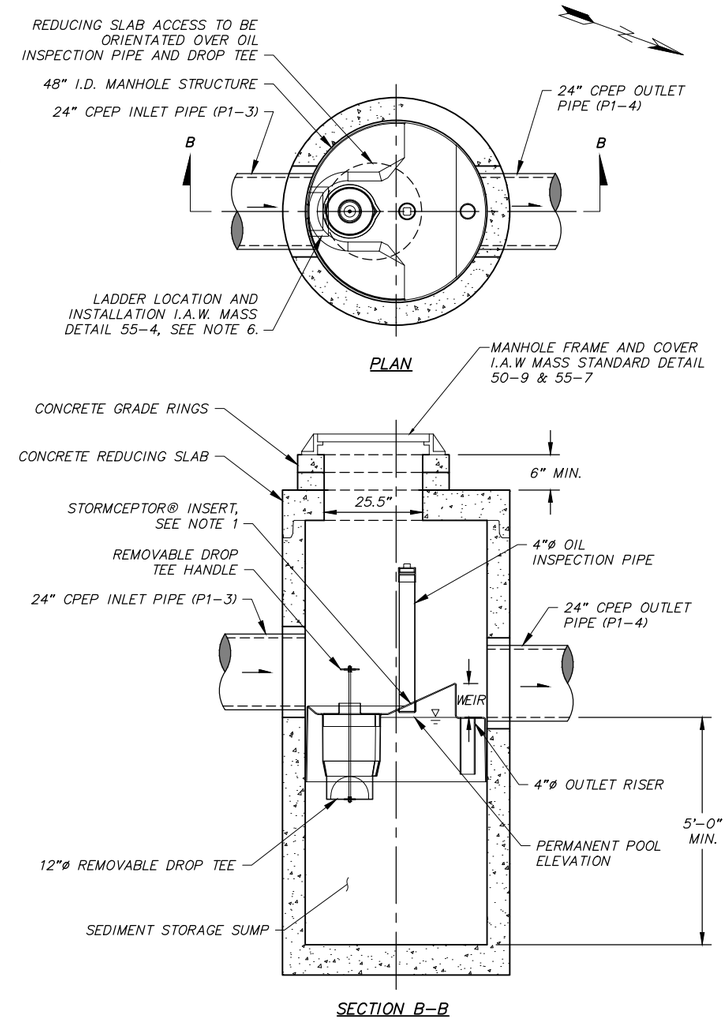

TYPE II CATCH BASIN MANHOLE NOTES

1. ALL CONSTRUCTION SHALL BE IN ACCORDANCE WITH THE 2015 MUNICIPALITY OF ANCHORAGE STANDARD SPECIFICATIONS AS CURRENTLY AMENDED AND AS MODIFIED ON THIS DETAIL.
2. SET MANHOLE COVER 1/4-INCH BELOW PCC SIDEWALK OR PAVED PATHWAY FINISH GRADE OR PER MASS STANDARD DETAIL 55-10 FOR ALL OTHER LOCATIONS.
3. MH CENTER MAY BE ON ROADWAY SIDE OF CURB LINE IN SOME LOCATIONS. ALIGN CATCH BASIN INLET WITH CURB LINE.
4. OFFSET FOR STANDARD INSTALLATION IS 0.95'.

1 TYPE II CATCH BASIN MANHOLE DETAIL

SCALE: NTS

BYPASS MANHOLE NOTES

1. CAST CONCRETE MOUNTING SURFACE INTO MANHOLE SUCH THAT BYPASS GATE HANDWHEEL IS CENTERED IN ACCESS OPENING.
2. BYPASS GATE STEM SHALL BE NON-RISING TO POSITION HANDWHEEL AT CONVENIENT STATIC OPERATING ELEVATION FROM MANHOLE OPENING ABOVE.
3. BYPASS MANHOLE (STRUCTURE S-2) SHALL BE PAID FOR UNDER PAY ITEM 55.05 CONSTRUCT (TYPE II) BYPASS MANHOLE.
4. INLET PIPE (P1-6) AND BYPASS PIPE (P1-5) NOT SHOWN IN SECTION A-A FOR CLARITY.

2 BYPASS MANHOLE (S2-3) DETAIL

SCALE: NTS

OIL & GRIT SEPARATOR NOTES

1. OIL AND GRIT SEPARATOR (STRUCTURE OGS1-1) SHALL BE STORMCEPTOR MODEL STC450i MANUFACTURED BY CONTECH ENGINEERED SOLUTIONS LLC OR APPROVED EQUAL.
2. ACCESS OPENING THROUGH REDUCING SLAB SHOULD BE POSITIONED OVER THE DROP TEE AND OIL PORT.
3. SEE STORM DRAIN PLAN & PROFILE SHEETS FOR INLET AND OUTLET PIPE INVERTS & ORIENTATION AND STRUCTURE INFORMATION.
4. LADDER RUNGS NOT SHOWN IN SECTION VIEW FOR CLARITY.

3 OIL AND GRIT SEPARATOR (OGS1-1)

SCALE: NTS

RECORD DRAWING

1. DATA PROVIDED BY: _____ TITLE: _____
   THIS WILL SERVE TO CERTIFY THAT THESE RECORD DRAWINGS ARE A TRUE AND ACCURATE REPRESENTATION OF THE PROJECT AS CONSTRUCTED.
   CONTRACTOR: _____
   BY: _____ TITLE: _____ DATE: _____
2. DATA TRANSFERRED BY: _____ TITLE: _____
   COMPANY: _____ DATE: _____
3. BASED ON PERIODIC FIELD OBSERVATIONS BY THE ENGINEER (OR AN INDIVIDUAL UNDER HIS/HER DIRECT SUPERVISION), THE CONTRACTOR-PROVIDED DATA APPEARS TO REPRESENT THE PROJECT AS CONSTRUCTED.
   DATA TRANSFER CHECKED BY: _____ TITLE: _____
   COMPANY: _____ DATE: _____
   BY: _____

DATA	DRAWN BY	CHECKED BY
BASE	TS	MJ
TOPOGRAPHY	TS	MJ
PROFILE	RB	JK
STORM SEWER	JH	JK
WATER/SANITARY SEWER	MV	JK
GAS	MV	JK
TELEPHONE	MV	JK
ELECTRIC	TK	BM
DESIGN	RB	JK
QUANTITIES	RB	JK
PRELIMINARY/FINAL	RB	JK
MUNICIPAL/STATE	RB	JK

PLAN CHECK

FIELD BOOKS	BM NO.	LOCATION	ELEV.
DESIGN CRW Books 147, 148, & 151	GAAB 66	See page D-24 of the MOA Benchmark Book	238.10
	GAAB 96	See page D-26 of the MOA Benchmark Book	313.83
STAKING			
ASBUILT			
CONTRACTOR	BASIS OF THIS DATUM GAAB 1972 ADJUST		
INSPECTOR			

CONSTRUCTION RECORD — VERTICAL DATUM

REV	DATE	DESCRIPTION	BY

REVISIONS

CRW ENGINEERING GROUP, LLC
3940 ARCTIC BLVD. SUITE 300
ANCHORAGE, ALASKA 99503
PHONE: (907) 562-3252
#AECL882-AK

CONSULTANT

STATE OF ALASKA 49 TH Joseph C. Hegna CE-11770 REGISTERED PROFESSIONAL ENGINEER

SEAL

MUNICIPALITY OF ANCHORAGE

PROJECT MANAGEMENT AND ENGINEERING DEPARTMENT

14-50 IMAGE DRIVE / REFLECTION DRIVE AREA ROAD RECONSTRUCTION – PHASE 2 SCHED B

STORM DRAIN DETAILS

SCALE HOR. 1"=20' VER. 1"=5' | GRID SW1638, SW1738 | DATE SEPT 2019 | STATUS 65% | SHEET SD12 of SD14

File: J:\JobsData\10133.00 Image Reflection Area Reconstruction\00 CADD\01 Working Set\01 Civil\Phase 2\10133.00 Details - Storm - Phase 2.dwg

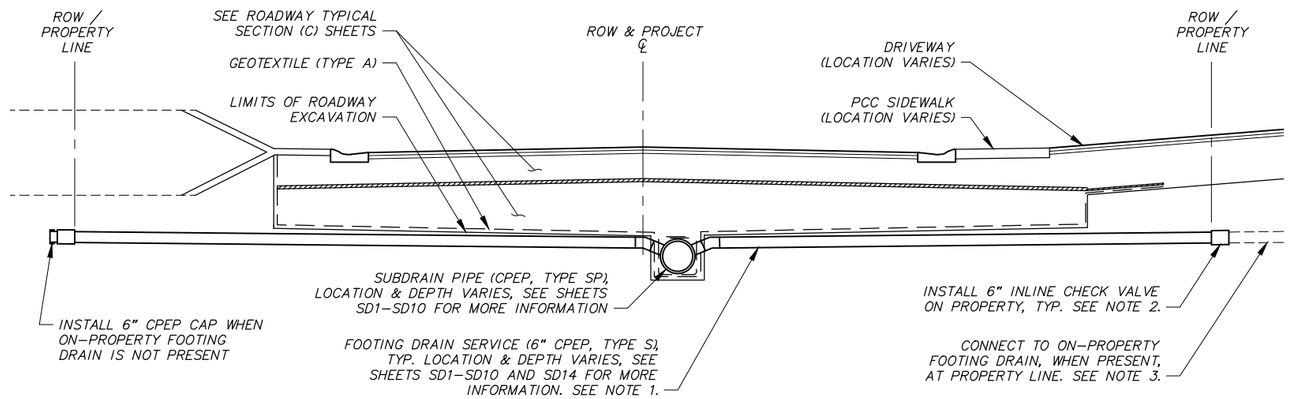

FOOTING DRAIN SERVICE NOTES

1. FOOTING DRAIN SERVICE SHALL BE CONSTRUCTED I.A.W. MASS STANDARD DETAIL 55–26 AND AS MODIFIED BY THIS DETAIL.
2. CHECK VALVE SHALL BE CHECKMATE INLINE CHECK VALVE MANUFACTURED BY TIDEFLEX TECHNOLOGIES (DIVISION OF RED VALVE, INC.) OR APPROVED EQUAL.
3. CONNECTION TO EXISTING FOOTING DRAIN SHALL BE INCIDENTAL TO PAY ITEM 55.18, CONSTRUCT FOOTING DRAIN SERVICE.

1 **FOOTING DRAIN SERVICE DETAIL**

SCALE: NTS

RECORD DRAWING

1. DATA PROVIDED BY: _____ TITLE: _____
   THIS WILL SERVE TO CERTIFY THAT THESE RECORD DRAWINGS ARE A TRUE AND ACCURATE REPRESENTATION OF THE PROJECT AS CONSTRUCTED.
   CONTRACTOR: _____
   BY: _____ TITLE: _____ DATE: _____
2. DATA TRANSFERRED BY: _____ TITLE: _____
   COMPANY: _____ DATE: _____
3. BASED ON PERIODIC FIELD OBSERVATIONS BY THE ENGINEER (OR AN INDIVIDUAL UNDER HIS/HER DIRECT SUPERVISION), THE CONTRACTOR–PROVIDED DATA APPEARS TO REPRESENT THE PROJECT AS CONSTRUCTED.
   DATA TRANSFER CHECKED BY: _____ TITLE: _____
   COMPANY: _____ DATE: _____
   BY: _____

DATA	DRAWN BY	CHECKED BY
BASE	TS	MJ
TOPOGRAPHY	TS	MJ
PROFILE	RB	JK
STORM SEWER	JH	JK
WATER/SANITARY SEWER	MV	JK
GAS	MV	JK
TELEPHONE	MV	JK
ELECTRIC	TK	BM
DESIGN	RB	JK
QUANTITIES	RB	JK
PRELIMINARY/FINAL	RB	JK
MUNICIPAL/STATE	RB	JK

PLAN CHECK

FIELD BOOKS	BM NO.	LOCATION	ELEV.
DESIGN CRW Books 147, 148, & 151	GAAB 66	See page D–24 of the MOA Benchmark Book	238.10
	GAAB 96	See page D–26 of the MOA Benchmark Book	313.83
STAKING			
ASBUILT			
CONTRACTOR	BASIS OF THIS DATUM GAAB 1972 ADJUST		
INSPECTOR			

CONSTRUCTION RECORD — VERTICAL DATUM

REV	DATE	DESCRIPTION	BY

REVISIONS

CRW ENGINEERING GROUP, LLC
3940 ARCTIC BLVD. SUITE 300
ANCHORAGE, ALASKA 99503
PHONE: (907) 562–3252
#AECL882–AK

CONSULTANT

STATE OF ALASKA 49TH Joseph C. Hegna CE-11770 REGISTERED PROFESSIONAL ENGINEER

SEAL

MUNICIPALITY OF ANCHORAGE

PROJECT MANAGEMENT AND ENGINEERING DEPARTMENT

14–50 IMAGE DRIVE / REFLECTION DRIVE AREA ROAD RECONSTRUCTION – PHASE 2 SCHED B

STORM DRAIN DETAILS

SCALE HOR. 1"=20' VER. 1"=5' | GRID SW1638, SW1738 | DATE SEPT 2019 | STATUS 65% | SHEET SD13 of SD14

File:J:\JobsData\10133.00 Image Reflection Area Reconstruction\00 CADD\01 Working Set\01 Civil\Phase 2\10133.00 Details – Storm – Phase 2.dwg

55.18 – CONSTRUCT FOOTING DRAIN SERVICE

SHEET	PARCEL	LOCATION STATION	LOCATION OFFSET (FT)	APPROX. LENGTH (FT)	CONNECT TO	ELEVATION AT ROW (2)
SD2	121	40+82	30.0 LT	32.1	SUBDRAIN PIPE	
	120	40+91	30.1 LT	32.3	SUBDRAIN PIPE	
	119	41+72	30.1 LT	33.1	MANHOLE S2–1	
	117	42+26	30.0 LT	15.6	MANHOLE S1–2	
	116	42+65	30.0 LT	30.0	SUBDRAIN PIPE	
	115	42+71	30.0 LT	30.3	SUBDRAIN PIPE	
	114	43+32	30.6 LT	31.4	SUBDRAIN PIPE	
SD3	113	44+22	30.0 LT	31.6	SUBDRAIN PIPE	
	112	44+83	30.0 LT	32.2	SUBDRAIN PIPE	
	182	44+87	29.9 RT	27.6	SUBDRAIN PIPE	
	111	44+93	30.0 LT	32.3	SUBDRAIN PIPE	
	181	44+93	29.9 RT	27.5	SUBDRAIN PIPE	
	110	45+63	30.0 LT	33.4	SUBDRAIN PIPE	
	180	45+64	30.0 RT	26.6	SUBDRAIN PIPE	
	109	45+70	29.8 LT	33.3	SUBDRAIN PIPE	
	179	45+72	30.0 RT	26.4	SUBDRAIN PIPE	
	108	46+28	29.8 LT	14.0	CATCH BASIN I3–1	
	107	46+34	29.8 LT	13.4	CATCH BASIN I3–1	
	106	46+86	30.1 LT	30.4	SUBDRAIN PIPE	
	178	46+99	29.1 RT	27.3	SUBDRAIN PIPE	
	105	47+19	30.1 LT	33.3	SUBDRAIN PIPE	
	177	47+20	30.2 RT	26.6	SUBDRAIN PIPE	
	104	47+62	30.9 LT	31.2	SUBDRAIN PIPE	
SD4	88	48+41	42.7 LT	46.5	SUBDRAIN PIPE	
	176	48+51	30.0 RT	23.9	SUBDRAIN PIPE	
	175	49+38	30.0 RT	30.3	SUBDRAIN PIPE	
	174	49+77	30.0 RT	25.3	SUBDRAIN PIPE	
	173	50+60	30.0 RT	29.3	SUBDRAIN PIPE	
	172	50+67	30.0 RT	31.0	SUBDRAIN PIPE	
	86	50+98	30.0 LT	24.1	SUBDRAIN PIPE	
	171	51+32	30.0 RT	36.5	SUBDRAIN PIPE	
	85	51+59	30.0 LT	25.4	SUBDRAIN PIPE	
	170	51+59	30.0 RT	33.9	SUBDRAIN PIPE	
	84	51+74	30.0 LT	27.7	SUBDRAIN PIPE	
	169	51+93	30.1 RT	26.9	SUBDRAIN PIPE	
	83	52+37	30.0 LT	23.9	SUBDRAIN PIPE	
	82	52+70	30.0 LT	20.3	SUBDRAIN PIPE	
SD5	81	53+11	30.0 LT	20.8	SUBDRAIN PIPE	
	80	53+54	30.0 LT	26.9	SUBDRAIN PIPE	
	79	54+18	30.0 LT	31.2	SUBDRAIN PIPE	
	157	54+21	30.0 RT	28.7	SUBDRAIN PIPE	
	156	54+61	30.0 RT	28.0	SUBDRAIN PIPE	
	155	55+02	29.9 RT	24.5	SUBDRAIN PIPE	
	154	55+36	30.0 RT	20.3	SUBDRAIN PIPE	
	153	56+06	30.0 RT	20.3	SUBDRAIN PIPE	
	152	56+48	30.1 RT	26.2	SUBDRAIN PIPE	
SD6	200	62+45	25.6 RT	24.5	SUBDRAIN PIPE	
	199	63+02	25.0 RT	22.4	SUBDRAIN PIPE	
	198	63+11	25.0 RT	24.6	SUBDRAIN PIPE	
	183	63+18	25.0 LT	22.6	SUBDRAIN PIPE	
	197	63+62	25.0 RT	31.4	SUBDRAIN PIPE	
	184	63+63	25.0 LT	18.6	SUBDRAIN PIPE	
	196	63+70	25.0 RT	31.2	SUBDRAIN PIPE	
	195	64+33	31.4 RT	27.8	SUBDRAIN PIPE	

55.18 – CONSTRUCT FOOTING DRAIN SERVICE

SHEET	PARCEL	LOCATION STATION	LOCATION OFFSET (FT)	APPROX. LENGTH (FT)	CONNECT TO	ELEVATION AT ROW (2)
SD6	194	64+40	37.4 RT	31.4	SUBDRAIN PIPE	
	185	64+67	49.9 LT	59.5	SUBDRAIN PIPE	
	193	64+69	49.9 RT	31.7	SUBDRAIN PIPE	
	192	64+88	46.6 RT	20.3	MANHOLE S6–5	
	186	64+99	42.9 LT	64.7	SUBDRAIN PIPE	
	191	65+02	37.3 RT	17.3	MANHOLE S6–5	
	187	65+12	31.7 LT	61.3	SUBDRAIN PIPE	
	190	65+13	23.8 RT	25.4	MANHOLE S6–5	
	189	65+20	5.1 RT	38.5	MANHOLE S6–5	
	188	65+21	10.8 LT	49.0	MANHOLE S6–5	
SD8	168	80+55	24.5 RT	20.9	SUBDRAIN PIPE	
	158	80+85	32.3 LT	29.9	SUBDRAIN PIPE	
	159	81+23	49.4 LT	45.6	SUBDRAIN PIPE	
	167	81+26	49.9 RT	53.6	SUBDRAIN PIPE	
	160	81+43	48.7 LT	45.6	SUBDRAIN PIPE	
	166	81+51	45.5 RT	48.5	SUBDRAIN PIPE	
	161	81+61	39.5 LT	36.8	MANHOLE S8–3	
	165	81+67	33.3 RT	38.6	SUBDRAIN PIPE	
	162	81+74	24.1 LT	26.5	MANHOLE S8–3	
	164	81+78	13.8 RT	25.4	MANHOLE S8–3	
	163	81+80	4.5 LT	21.2	MANHOLE S8–3	
SD9	63	90+94	25.0 RT	19.5	SUBDRAIN PIPE	
	64	91+17	27.3 RT	21.6	SUBDRAIN PIPE	
	78	91+22	25.0 LT	30.8	SUBDRAIN PIPE	
	77	91+57	25.0 LT	31.3	SUBDRAIN PIPE	
	76	92+06	25.0 LT	31.6	SUBDRAIN PIPE	
	73	92+21	44.7 LT	26.0	MANHOLE S9–2	
	71	92+44	50.1 LT	48.0	MANHOLE S9–2	
	70	92+72	50.0 LT	69.0	SUBDRAIN PIPE	
	69	92+96	48.5 LT	87.5	SUBDRAIN PIPE	
	65	93+10	42.4 RT	60.1	SUBDRAIN PIPE	
	68	93+17	37.2 LT	100.6	SUBDRAIN PIPE	
	67	93+32	13.3 LT	103.5	SUBDRAIN PIPE	
	66	93+32	13.7 RT	91.8	SUBDRAIN PIPE	
	72	–	–	45.5	MANHOLE S9–2	
	74	–	–	24.4	MANHOLE S9–2	
	75	–	–	30.9	SUBDRAIN PIPE	
SD10	46	25+09	30.0 RT	28.1	SUBDRAIN PIPE	
	47	25+43	30.0 RT	27.8	SUBDRAIN PIPE	
	48	25+85	30.0 RT	27.4	SUBDRAIN PIPE	
	49	27+03	30.0 RT	14.8	SUBDRAIN PIPE	
	50	28+06	30.0 RT	75.7	CATCH BASIN I10–2	
	62	25+93	30.0 LT	32.4	SUBDRAIN PIPE	
	61	26+20	30.0 LT	32.5	SUBDRAIN PIPE	
	60	26+53	43.7 LT	27.7	SUBDRAIN PIPE	
	59	26+65	68.3 LT	20.2	CATCH BASIN I10–1	
	58	26+84	86.2 LT	28.8	CATCH BASIN I10–1	
	57	26+92	88.4 LT	35.9	CATCH BASIN I10–1	

20.26 – INSULATION BOARD (R–20) – PIPE CROSSINGS & STORM DRAIN INSULATION

SHEET	START STATION	START OFFSET (FT)	END STATION	END OFFSET (FT)	WIDTH (FT)	LENGTH (FT)	AREA (SF)	COMMENTS
SD1	200+87	CL	202+03	CL	4	116	463	

RECORD DRAWING

1. DATA PROVIDED BY: _____ TITLE: _____
   THIS WILL SERVE TO CERTIFY THAT THESE RECORD DRAWINGS ARE A TRUE AND ACCURATE REPRESENTATION OF THE PROJECT AS CONSTRUCTED.
   CONTRACTOR: _____
   BY: _____ TITLE: _____ DATE: _____
2. DATA TRANSFERRED BY: _____ TITLE: _____
   COMPANY: _____ DATE: _____
3. BASED ON PERIODIC FIELD OBSERVATIONS BY THE ENGINEER (OR AN INDIVIDUAL UNDER HIS/HER DIRECT SUPERVISION), THE CONTRACTOR–PROVIDED DATA APPEARS TO REPRESENT THE PROJECT AS CONSTRUCTED.
   DATA TRANSFER CHECKED BY: _____ TITLE: _____
   COMPANY: _____ DATE: _____
   BY: _____

DATA	DRAWN BY	CHECKED BY
BASE	TS	MJ
TOPOGRAPHY	TS	MJ
PROFILE	RB	JK
STORM SEWER	JH	JK
WATER/SANITARY SEWER	MV	JK
GAS	MV	JK
TELEPHONE	MV	JK
ELECTRIC	TK	BM
DESIGN	RB	JK
QUANTITIES	RB	JK
PRELIMINARY/FINAL	RB	JK
MUNICIPAL/STATE	RB	JK

PLAN CHECK

FIELD BOOKS	BM NO.	LOCATION	ELEV.
DESIGN CRW Books 147, 148, & 151	GAAB 66	See page D–24 of the MOA Benchmark Book	238.10
	GAAB 96	See page D–26 of the MOA Benchmark Book	313.83
STAKING			
ASBUILT			
CONTRACTOR	BASIS OF THIS DATUM GAAB 1972 ADJUST		
INSPECTOR			

CONSTRUCTION RECORD — VERTICAL DATUM

REV	DATE	DESCRIPTION	BY

REVISIONS

CRW ENGINEERING GROUP, LLC
3940 ARCTIC BLVD. SUITE 300
ANCHORAGE, ALASKA 99503
PHONE: (907) 562–3252
#AECL882–AK

CONSULTANT

STATE OF ALASKA 49TH — Joseph C. Hegna CE-11770 — REGISTERED PROFESSIONAL ENGINEER

SEAL

MUNICIPALITY OF ANCHORAGE

PROJECT MANAGEMENT AND ENGINEERING DEPARTMENT

14–50 IMAGE DRIVE / REFLECTION DRIVE AREA ROAD RECONSTRUCTION – PHASE 2 SCHED B

STORM DRAIN SUMMARY TABLES

SCALE HOR. 1"=20' VER. 1"=5' | GRID SW1638, SW1738 | DATE SEPT 2019 | STATUS 65% | SHEET SD14 of SD14

File: J:\JobsData\10133.00 Image Reflection Area Reconstruction\00 CADD\01 Working Set\01 Civil\Phase 2\10133.00 Details – Storm – Phase 2.dwg

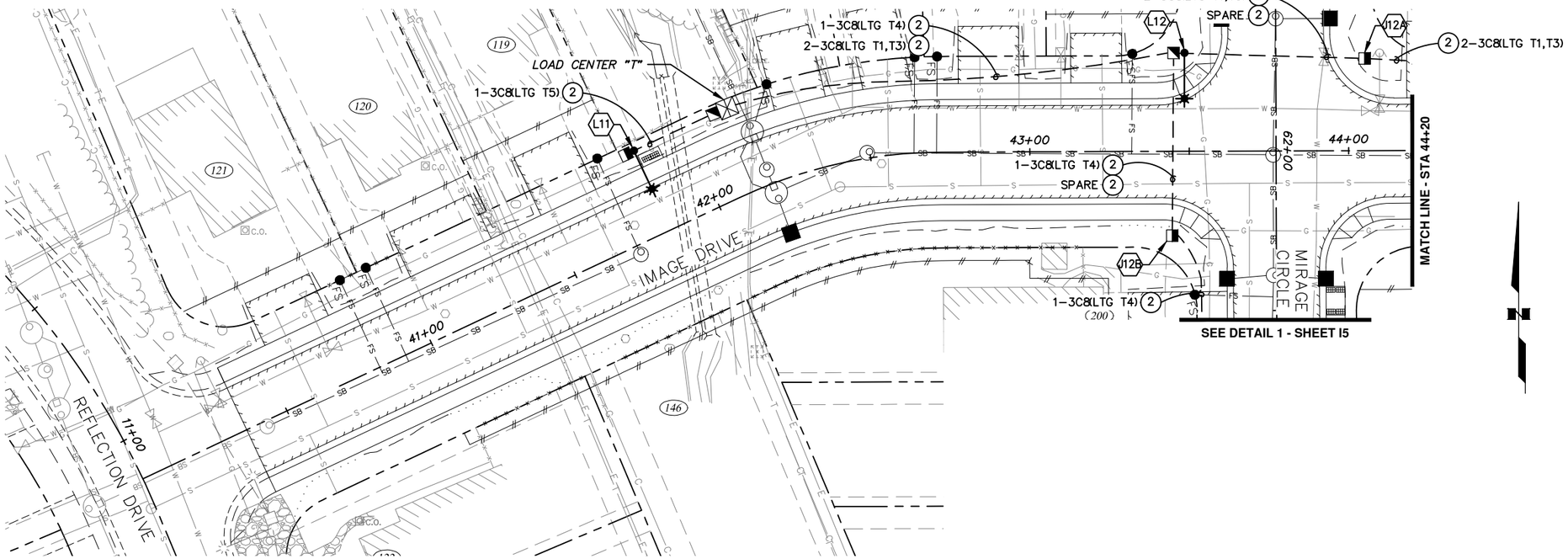

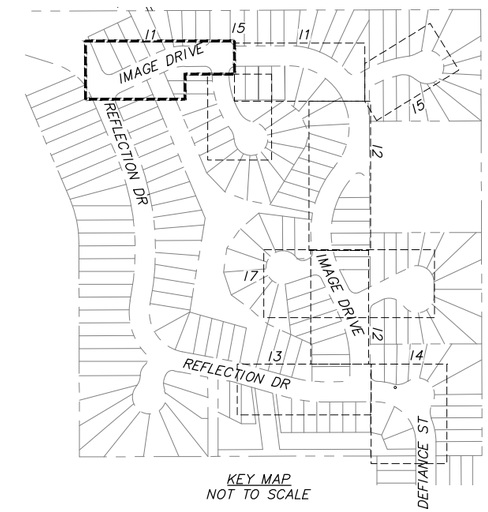

KEY MAP
NOT TO SCALE

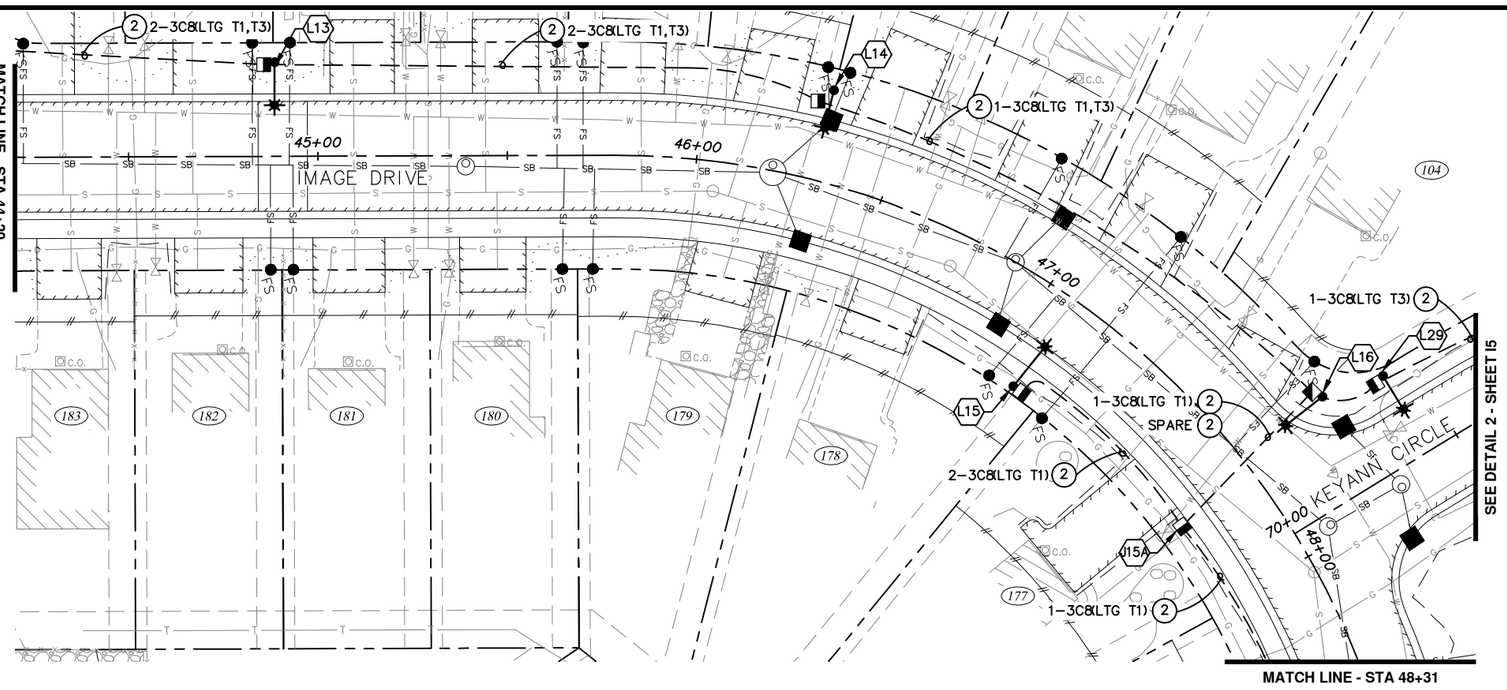

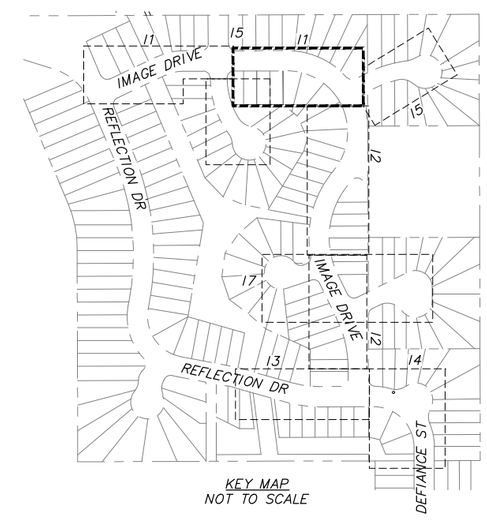

KEY MAP
NOT TO SCALE

RECORD DRAWING

1. DATA PROVIDED BY: _____ TITLE: _____
   THIS WILL SERVE TO CERTIFY THAT THESE RECORD DRAWINGS ARE A TRUE AND ACCURATE REPRESENTATION OF THE PROJECT AS CONSTRUCTED.
   CONTRACTOR: _____
   BY: _____ TITLE: _____ DATE: _____
2. DATA TRANSFERRED BY: _____ TITLE: _____
   COMPANY: _____ DATE: _____
3. BASED ON PERIODIC FIELD OBSERVATIONS BY THE ENGINEER (OR AN INDIVIDUAL UNDER HIS/HER DIRECT SUPERVISION), THE CONTRACTOR-PROVIDED DATA APPEARS TO REPRESENT THE PROJECT AS CONSTRUCTED.
   DATA TRANSFER CHECKED BY: _____ TITLE: _____
   COMPANY: _____ DATE: _____
   BY: _____

DATA	DRAWN BY	CHECKED BY
BASE	TS	MJ
TOPOGRAPHY	TS	MJ
PROFILE	RB	JK
STORM SEWER	JH	JK
WATER/SANITARY SEWER	MV	JK
GAS	MV	JK
TELEPHONE	MV	JK
ELECTRIC	TK	BM
DESIGN	RB	JK
QUANTITIES	RB	JK
PRELIMINARY/FINAL	RB	JK
MUNICIPAL/STATE	RB	JK

PLAN CHECK

GRAPHIC 40 20 0 20 40 SCALE

FIELD BOOKS	BM NO.	LOCATION	ELEV.
DESIGN CRW Books 147, 148, & 151	GAAB 66	See page D-24 of the MOA Benchmark Book	238.10
	GAAB 96	See page D-26 of the MOA Benchmark Book	313.83
STAKING			
ASBUILT			
CONTRACTOR	BASIS OF THIS DATUM GAAB 1972 ADJUST		
INSPECTOR			

CONSTRUCTION RECORD — VERTICAL DATUM

REV	DATE	DESCRIPTION	BY

REVISIONS

CRW ENGINEERING GROUP, LLC
3940 ARCTIC BLVD. SUITE 300
ANCHORAGE, ALASKA 99503
PHONE: (907) 562-3252
#AECL882-AK

CONSULTANT

STATE OF ALASKA 49TH
Tyler R. Keene
EE-14401
REGISTERED PROFESSIONAL ENGINEER

SEAL

MUNICIPALITY OF ANCHORAGE

PROJECT MANAGEMENT AND ENGINEERING DEPARTMENT

14-50 IMAGE DRIVE / REFLECTION DRIVE AREA ROAD RECONSTRUCTION – PHASE 2 SCHED C

ILLUMINATION IMPROVEMENTS

SCALE HOR. 1"=20' VER. N/A | GRID SW1638, SW1738 | DATE SEPT 2019 | STATUS 65% | SHEET 11 of 19

File: J:\JobsData\10133.00 Image Reflection Area Reconstruction\00 CADD\01 Working Set\03 Electrical\Phase 2\10133.00 Illumination – Phase 2.dwg

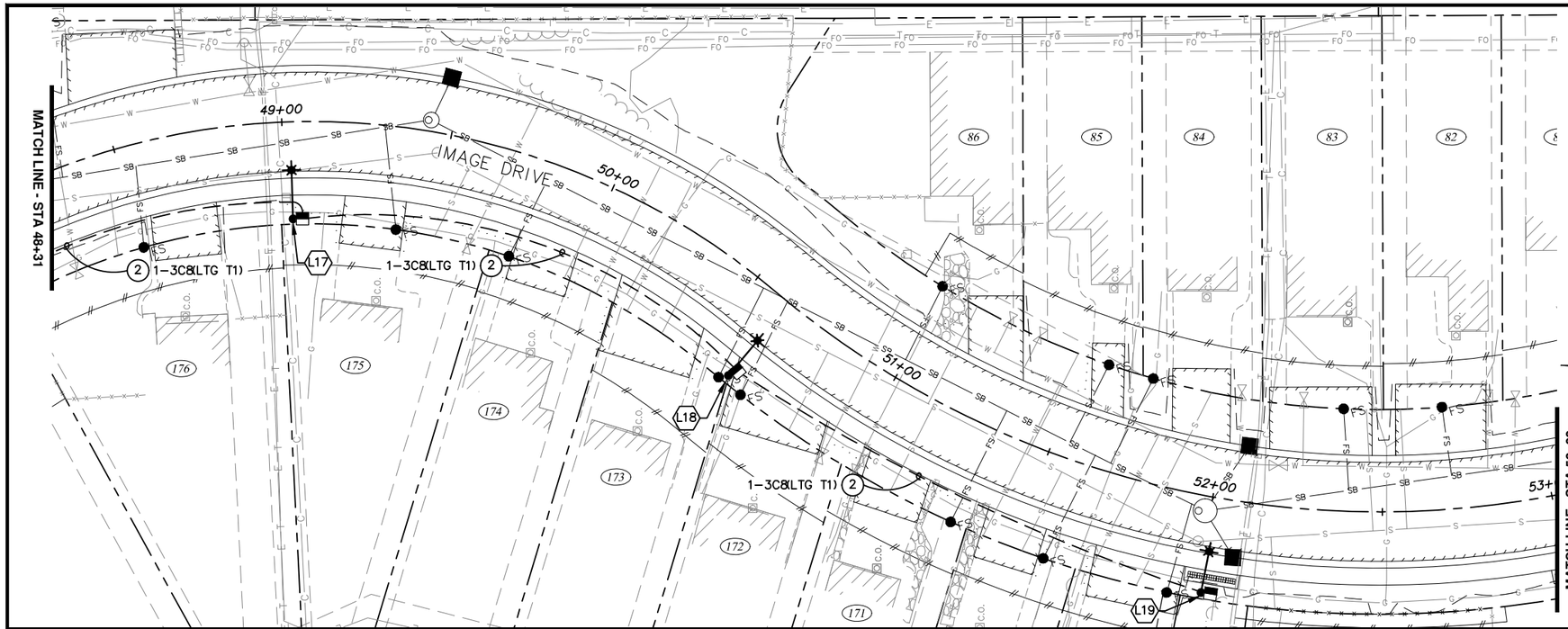

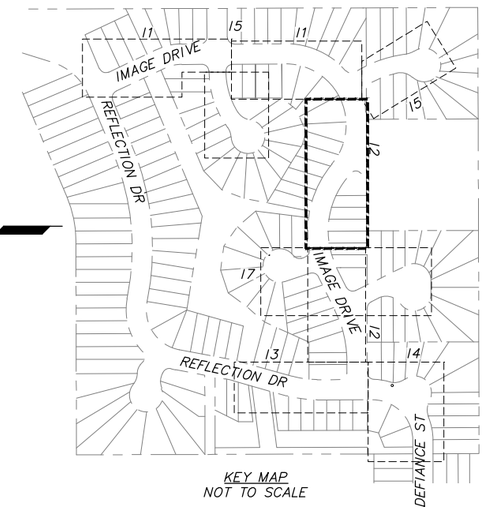

KEY MAP
NOT TO SCALE

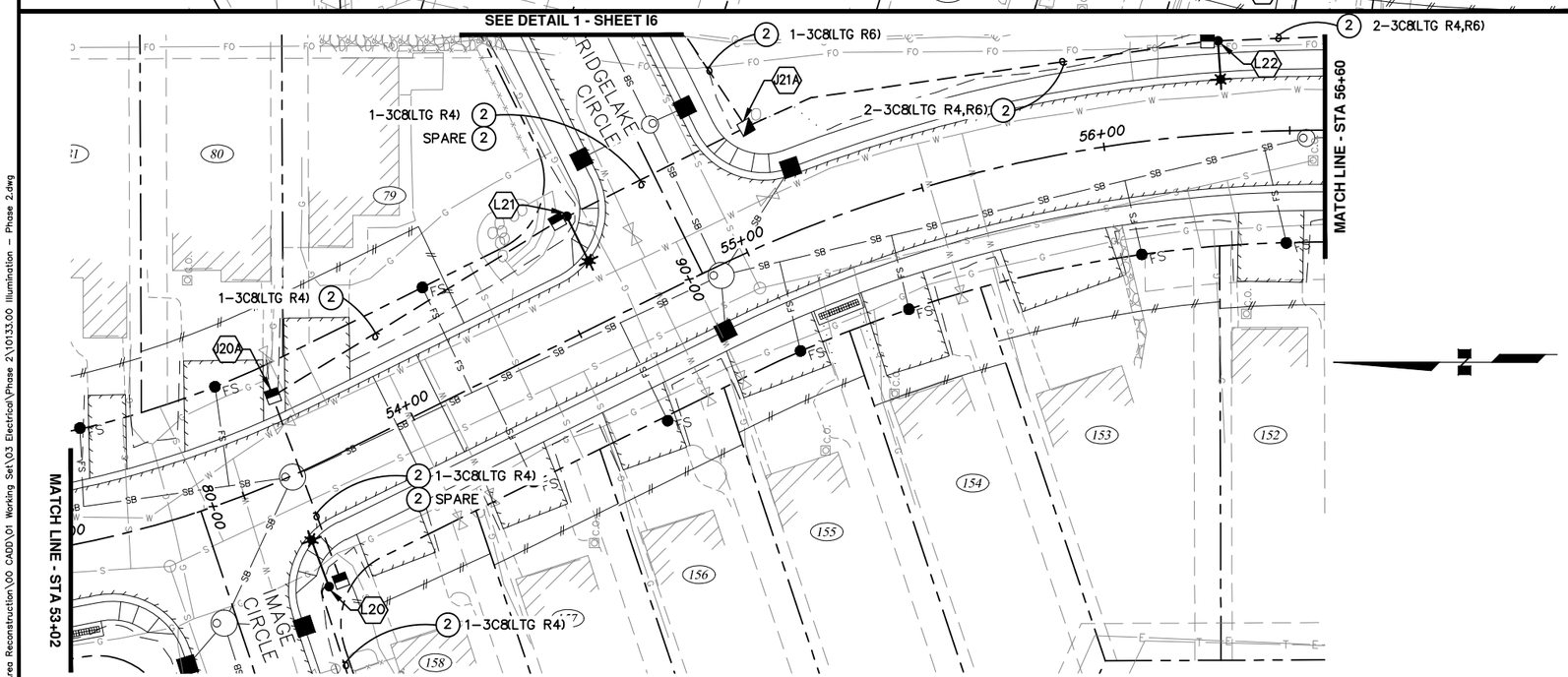

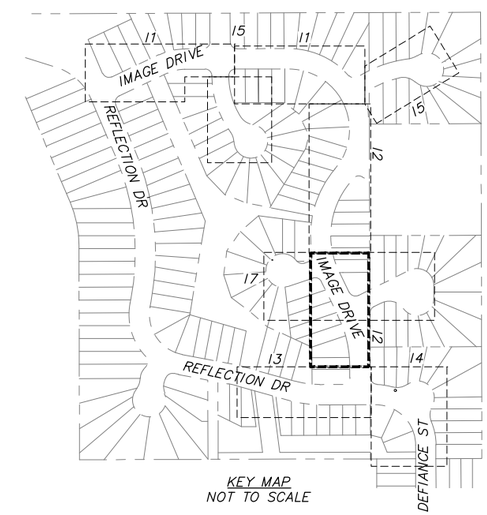

KEY MAP
NOT TO SCALE

RECORD DRAWING

1. DATA PROVIDED BY: _____ TITLE: _____
   THIS WILL SERVE TO CERTIFY THAT THESE RECORD DRAWINGS ARE A TRUE AND ACCURATE REPRESENTATION OF THE PROJECT AS CONSTRUCTED.
   CONTRACTOR: _____
   BY: _____ TITLE: _____ DATE: _____
2. DATA TRANSFERRED BY: _____ TITLE: _____
   COMPANY: _____ DATE: _____
3. BASED ON PERIODIC FIELD OBSERVATIONS BY THE ENGINEER (OR AN INDIVIDUAL UNDER HIS/HER DIRECT SUPERVISION), THE CONTRACTOR-PROVIDED DATA APPEARS TO REPRESENT THE PROJECT AS CONSTRUCTED.
   DATA TRANSFER CHECKED BY: _____ TITLE: _____
   COMPANY: _____ DATE: _____
   BY: _____

DATA	DRAWN BY	CHECKED BY
BASE	TS	MJ
TOPOGRAPHY	TS	MJ
PROFILE	RB	JK
STORM SEWER	JH	JK
WATER/SANITARY SEWER	MV	JK
GAS	MV	JK
TELEPHONE	MV	JK
ELECTRIC	TK	BM
DESIGN	RB	JK
QUANTITIES	RB	JK
PRELIMINARY/FINAL	RB	JK
MUNICIPAL/STATE	RB	JK

PLAN CHECK

GRAPHIC 40 20 0 20 40 SCALE

FIELD BOOKS	BM NO.	LOCATION	ELEV.
DESIGN CRW Books 147, 148, & 151	GAAB 66	See page D-24 of the MOA Benchmark Book	238.10
	GAAB 96	See page D-26 of the MOA Benchmark Book	313.83
STAKING			
ASBUILT			
CONTRACTOR	BASIS OF THIS DATUM GAAB 1972 ADJUST		
INSPECTOR			

CONSTRUCTION RECORD — VERTICAL DATUM

REV	DATE	DESCRIPTION	BY

REVISIONS

CRW ENGINEERING GROUP, LLC
3940 ARCTIC BLVD. SUITE 300
ANCHORAGE, ALASKA 99503
PHONE: (907) 562-3252
#AECL882-AK

CONSULTANT

STATE OF ALASKA 49 TH Tyler R. Keene EE-14401 REGISTERED PROFESSIONAL ENGINEER

SEAL

MUNICIPALITY OF ANCHORAGE

PROJECT MANAGEMENT AND ENGINEERING DEPARTMENT

14-50 IMAGE DRIVE / REFLECTION DRIVE AREA ROAD RECONSTRUCTION - PHASE 2 SCHED C

ILLUMINATION IMPROVEMENTS

SCALE HOR. 1"=20' VER. N/A | GRID SW1638, SW1738 | DATE SEPT 2019 | STATUS 65% | SHEET 12 of 19

File:J:\JobsData\10133.00 Image Reflection Area Reconstruction\00 CADD\01 Working Set\03 Electrical\Phase 2\10133.00 Illumination - Phase 2.dwg

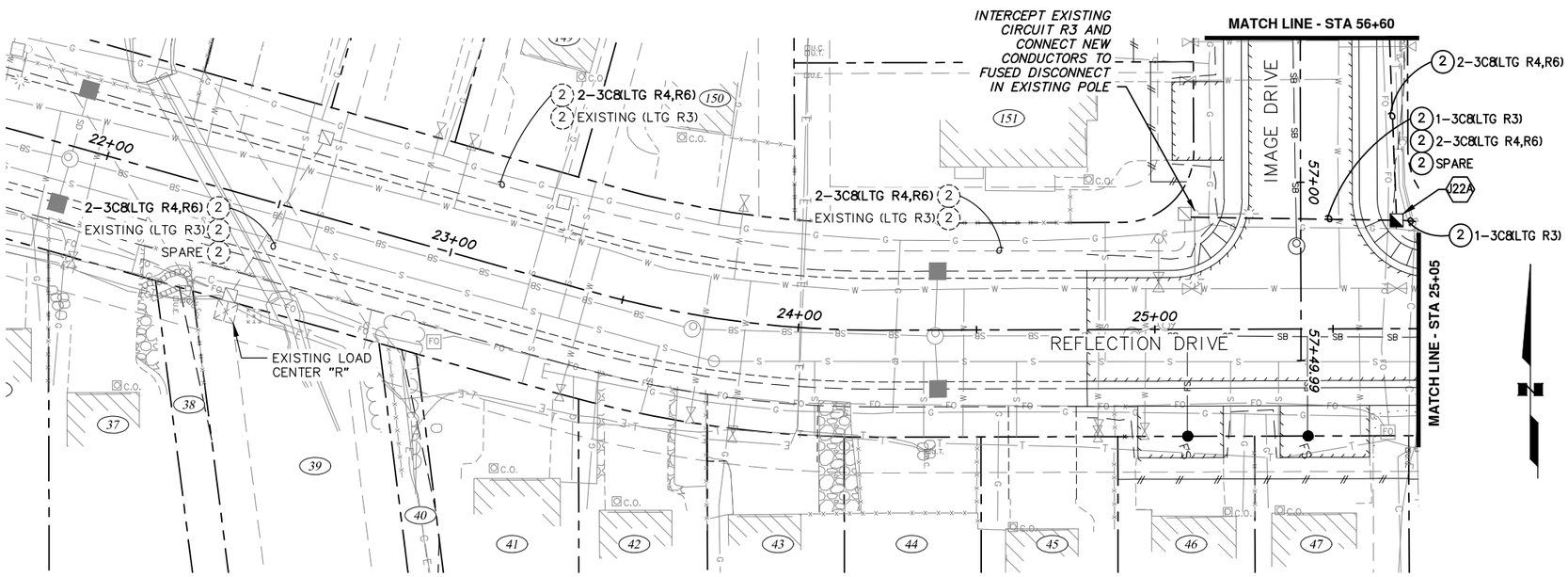

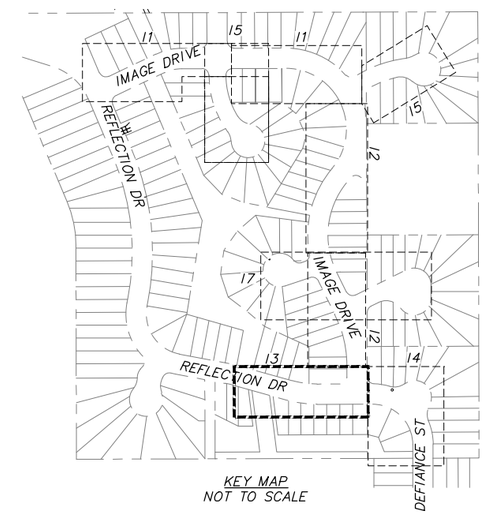

KEY MAP
NOT TO SCALE

RECORD DRAWING

1. DATA PROVIDED BY: _____ TITLE: _____
   THIS WILL SERVE TO CERTIFY THAT THESE RECORD DRAWINGS ARE A TRUE AND ACCURATE REPRESENTATION OF THE PROJECT AS CONSTRUCTED.
   CONTRACTOR: _____
   BY: _____ TITLE: _____ DATE: _____
2. DATA TRANSFERRED BY: _____ TITLE: _____
   COMPANY: _____ DATE: _____
3. BASED ON PERIODIC FIELD OBSERVATIONS BY THE ENGINEER (OR AN INDIVIDUAL UNDER HIS/HER DIRECT SUPERVISION), THE CONTRACTOR–PROVIDED DATA APPEARS TO REPRESENT THE PROJECT AS CONSTRUCTED.
   DATA TRANSFER CHECKED BY: _____ TITLE: _____
   COMPANY: _____ DATE: _____
   BY: _____

DATA	DRAWN BY	CHECKED BY
BASE	TS	MJ
TOPOGRAPHY	TS	MJ
PROFILE	RB	JK
STORM SEWER	JH	JK
WATER/SANITARY SEWER	MV	JK
GAS	MV	JK
TELEPHONE	MV	JK
ELECTRIC	TK	BM
DESIGN	RB	JK
QUANTITIES	RB	JK
PRELIMINARY/FINAL	RB	JK
MUNICIPAL/STATE	RB	JK

PLAN CHECK

GRAPHIC 40 20 0 20 40 SCALE

FIELD BOOKS	BM NO.	LOCATION	ELEV.
DESIGN CRW Books 147, 148, & 151	GAAB 66	See page D–24 of the MOA Benchmark Book	238.10
	GAAB 96	See page D–26 of the MOA Benchmark Book	313.83
STAKING			
ASBUILT			
CONTRACTOR	BASIS OF THIS DATUM GAAB 1972 ADJUST		
INSPECTOR			

CONSTRUCTION RECORD

VERTICAL DATUM

REV	DATE	DESCRIPTION	BY

REVISIONS

CRW ENGINEERING GROUP, LLC
3940 ARCTIC BLVD. SUITE 300
ANCHORAGE, ALASKA 99503
PHONE: (907) 562–3252
#AECL882–AK

CONSULTANT

STATE OF ALASKA 49 TH
Tyler R. Keene
EE-14401
REGISTERED PROFESSIONAL ENGINEER

SEAL

MUNICIPALITY OF ANCHORAGE

PROJECT MANAGEMENT AND ENGINEERING DEPARTMENT

14–50 IMAGE DRIVE / REFLECTION DRIVE AREA ROAD RECONSTRUCTION – PHASE 2 SCHED C

ILLUMINATION IMPROVEMENTS

SCALE HOR. 1"=20' VER. N/A | GRID SW1638, SW1738 | DATE SEPT 2019 | STATUS 65% | SHEET 13 of 19

File:J:\JobsData\10133.00 Image Reflection Area Reconstruction\00 CADD\01 Working Set\03 Electrical\Phase 2\10133.00 Illumination – Phase 2.dwg

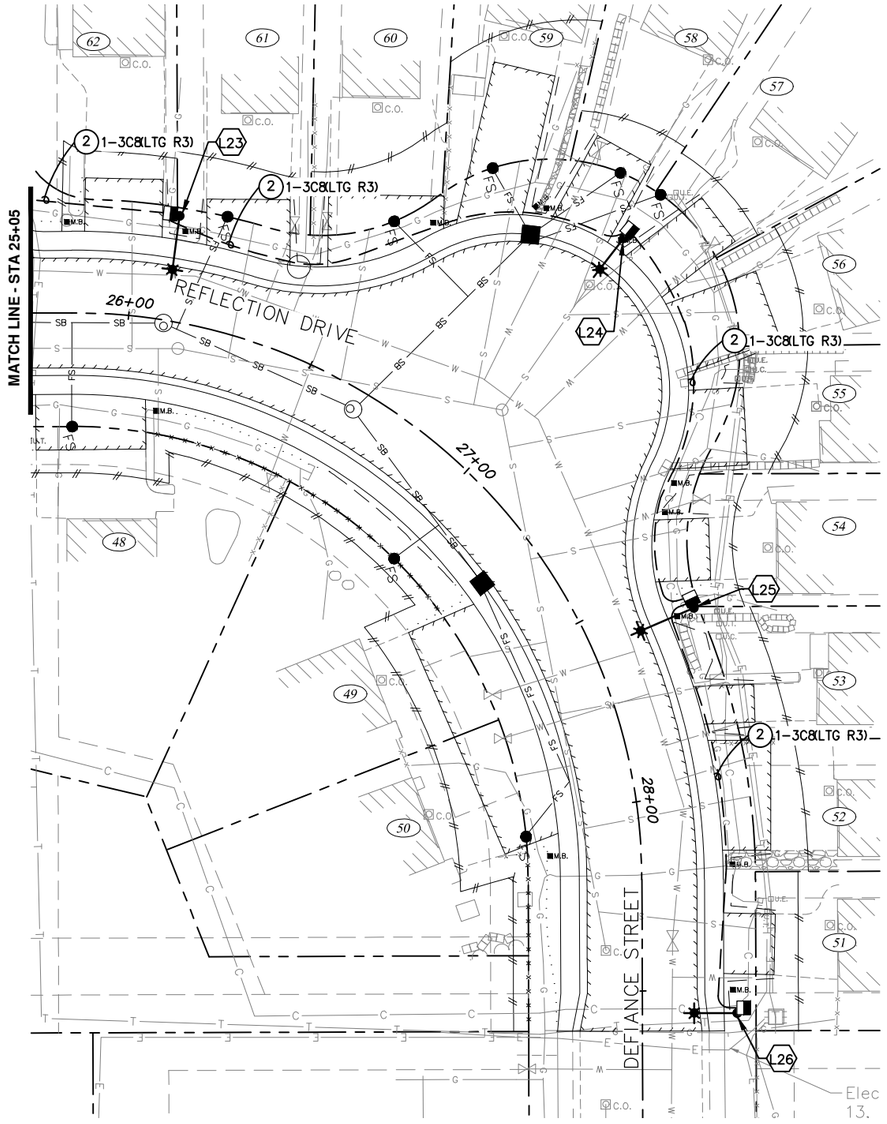

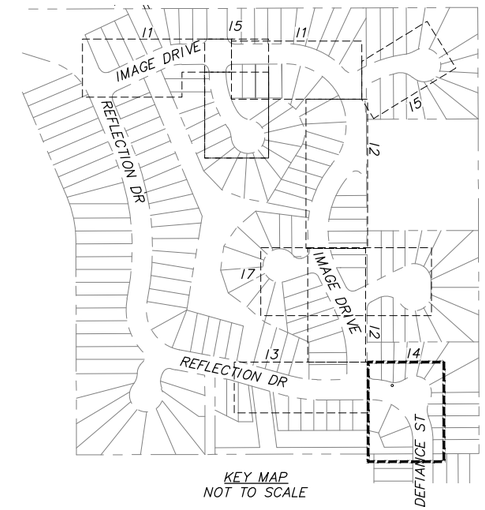

KEY MAP
NOT TO SCALE

RECORD DRAWING

1. DATA PROVIDED BY: _____ TITLE: _____
   THIS WILL SERVE TO CERTIFY THAT THESE RECORD DRAWINGS ARE A TRUE AND ACCURATE REPRESENTATION OF THE PROJECT AS CONSTRUCTED.
   CONTRACTOR: _____
   BY: _____ TITLE: _____ DATE: _____
2. DATA TRANSFERRED BY: _____ TITLE: _____
   COMPANY: _____ DATE: _____
3. BASED ON PERIODIC FIELD OBSERVATIONS BY THE ENGINEER (OR AN INDIVIDUAL UNDER HIS/HER DIRECT SUPERVISION), THE CONTRACTOR-PROVIDED DATA APPEARS TO REPRESENT THE PROJECT AS CONSTRUCTED.
   DATA TRANSFER CHECKED BY: _____ TITLE: _____
   COMPANY: _____ DATE: _____
   BY: _____

DATA	DRAWN BY	CHECKED BY
BASE	TS	MJ
TOPOGRAPHY	TS	MJ
PROFILE	RB	JK
STORM SEWER	JH	JK
WATER/SANITARY SEWER	MV	JK
GAS	MV	JK
TELEPHONE	MV	JK
ELECTRIC	TK	BM
DESIGN	RB	JK
QUANTITIES	RB	JK
PRELIMINARY/FINAL	RB	JK
MUNICIPAL/STATE	RB	JK

PLAN CHECK

GRAPHIC 40 20 0 20 40 SCALE

FIELD BOOKS	BM NO.	LOCATION	ELEV.
DESIGN CRW Books 147, 148, & 151	GAAB 66	See page D-24 of the MOA Benchmark Book	238.10
	GAAB 96	See page D-26 of the MOA Benchmark Book	313.83
STAKING			
ASBUILT			
CONTRACTOR	BASIS OF THIS DATUM GAAB 1972 ADJUST		
INSPECTOR			

CONSTRUCTION RECORD — VERTICAL DATUM

REV	DATE	DESCRIPTION	BY

REVISIONS

CRW ENGINEERING GROUP, LLC
3940 ARCTIC BLVD. SUITE 300
ANCHORAGE, ALASKA 99503
PHONE: (907) 562-3252
#AECL882-AK

CONSULTANT

STATE OF ALASKA 49TH
Tyler R. Keene
EE-14401
REGISTERED PROFESSIONAL ENGINEER

SEAL

MUNICIPALITY OF ANCHORAGE

PROJECT MANAGEMENT AND ENGINEERING DEPARTMENT

14-50 IMAGE DRIVE / REFLECTION DRIVE AREA ROAD RECONSTRUCTION - PHASE 2 SCHED C

ILLUMINATION IMPROVEMENTS

SCALE HOR. 1"=20' VER. N/A | GRID SW1638, SW1738 | DATE SEPT 2019 | STATUS 65% | SHEET 14 of 19

File:J:\Jobsdata\10133.00 Image Reflection Area Reconstruction\00 CADD\01 Working Set\03 Electrical\Phase 2\10133.00 Illumination - Phase 2.dwg

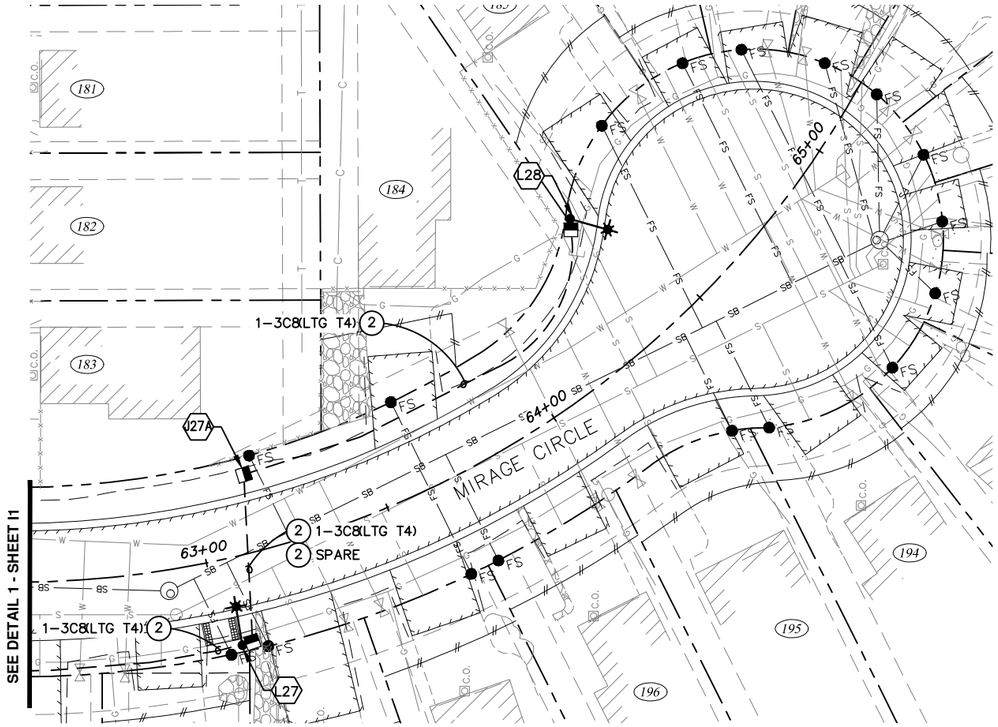

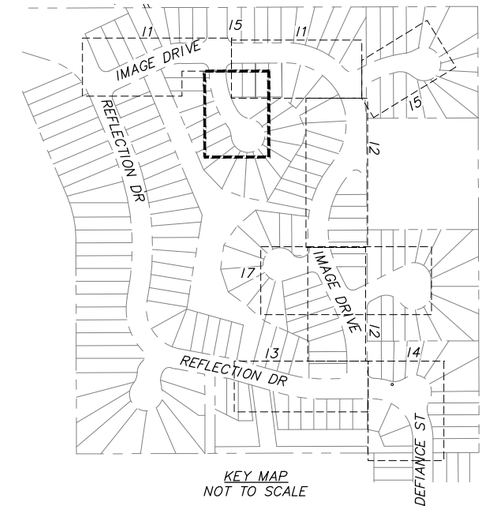

KEY MAP
NOT TO SCALE

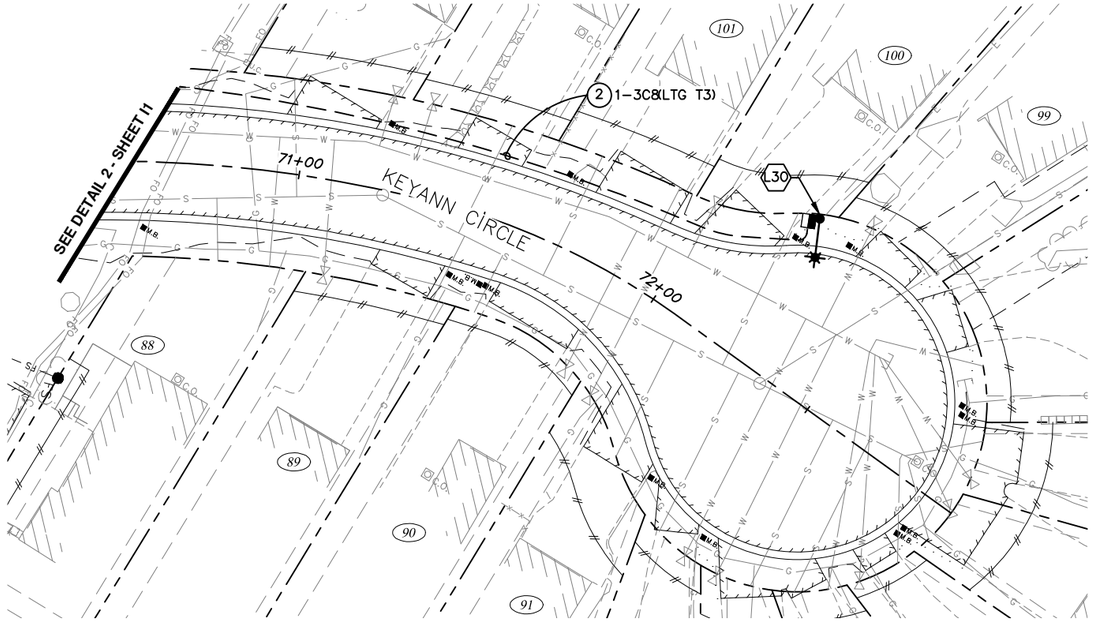

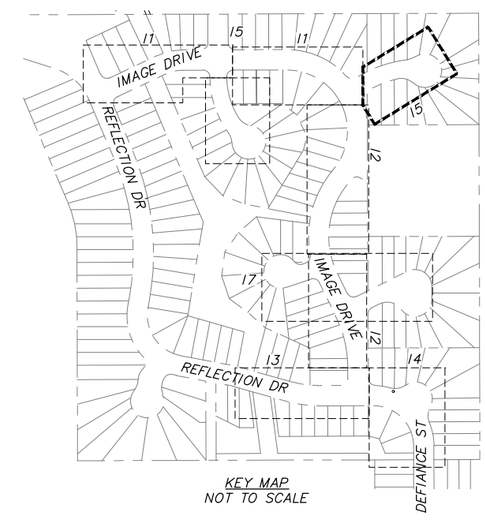

KEY MAP
NOT TO SCALE

RECORD DRAWING

1. DATA PROVIDED BY: _____ TITLE: _____
   THIS WILL SERVE TO CERTIFY THAT THESE RECORD DRAWINGS ARE A TRUE AND ACCURATE REPRESENTATION OF THE PROJECT AS CONSTRUCTED.
   CONTRACTOR: _____
   BY: _____ TITLE: _____ DATE: _____
2. DATA TRANSFERRED BY: _____ TITLE: _____
   COMPANY: _____ DATE: _____
3. BASED ON PERIODIC FIELD OBSERVATIONS BY THE ENGINEER (OR AN INDIVIDUAL UNDER HIS/HER DIRECT SUPERVISION), THE CONTRACTOR-PROVIDED DATA APPEARS TO REPRESENT THE PROJECT AS CONSTRUCTED.
   DATA TRANSFER CHECKED BY: _____ TITLE: _____
   COMPANY: _____ DATE: _____
   BY: _____

DATA	DRAWN BY	CHECKED BY
BASE	TS	MJ
TOPOGRAPHY	TS	MJ
PROFILE	RB	JK
STORM SEWER	JH	JK
WATER/SANITARY SEWER	MV	JK
GAS	MV	JK
TELEPHONE	MV	JK
ELECTRIC	TK	BM
DESIGN	RB	JK
QUANTITIES	RB	JK
PRELIMINARY/FINAL	RB	JK
MUNICIPAL/STATE	RB	JK

PLAN CHECK

GRAPHIC 40 20 0 20 40 SCALE

FIELD BOOKS	BM NO.	LOCATION	ELEV.
DESIGN CRW Books 147, 148, & 151	GAAB 66	See page D-24 of the MOA Benchmark Book	238.10
	GAAB 96	See page D-26 of the MOA Benchmark Book	313.83
STAKING			
ASBUILT			
CONTRACTOR	BASIS OF THIS DATUM GAAB 1972 ADJUST		
INSPECTOR			

CONSTRUCTION RECORD — VERTICAL DATUM

REV	DATE	DESCRIPTION	BY

REVISIONS

CRW ENGINEERING GROUP, LLC
3940 ARCTIC BLVD. SUITE 300
ANCHORAGE, ALASKA 99503
PHONE: (907) 562-3252
#AECL882-AK

CONSULTANT

STATE OF ALASKA 49TH Tyler R. Keene EE-14401 REGISTERED PROFESSIONAL ENGINEER

SEAL

MUNICIPALITY OF ANCHORAGE

PROJECT MANAGEMENT AND ENGINEERING DEPARTMENT

14-50 IMAGE DRIVE / REFLECTION DRIVE AREA ROAD RECONSTRUCTION - PHASE 2 SCHED C

ILLUMINATION IMPROVEMENTS

SCALE HOR. 1"=20' VER. N/A | GRID SW1638, SW1738 | DATE SEPT 2019 | STATUS 65% | SHEET 15 of 19

File: J:\JobsData\10133.00 Image Reflection Area Reconstruction\00 CADD\01 Working Set\03 Electrical\Phase 2\10133.00 Illumination - Phase 2.dwg

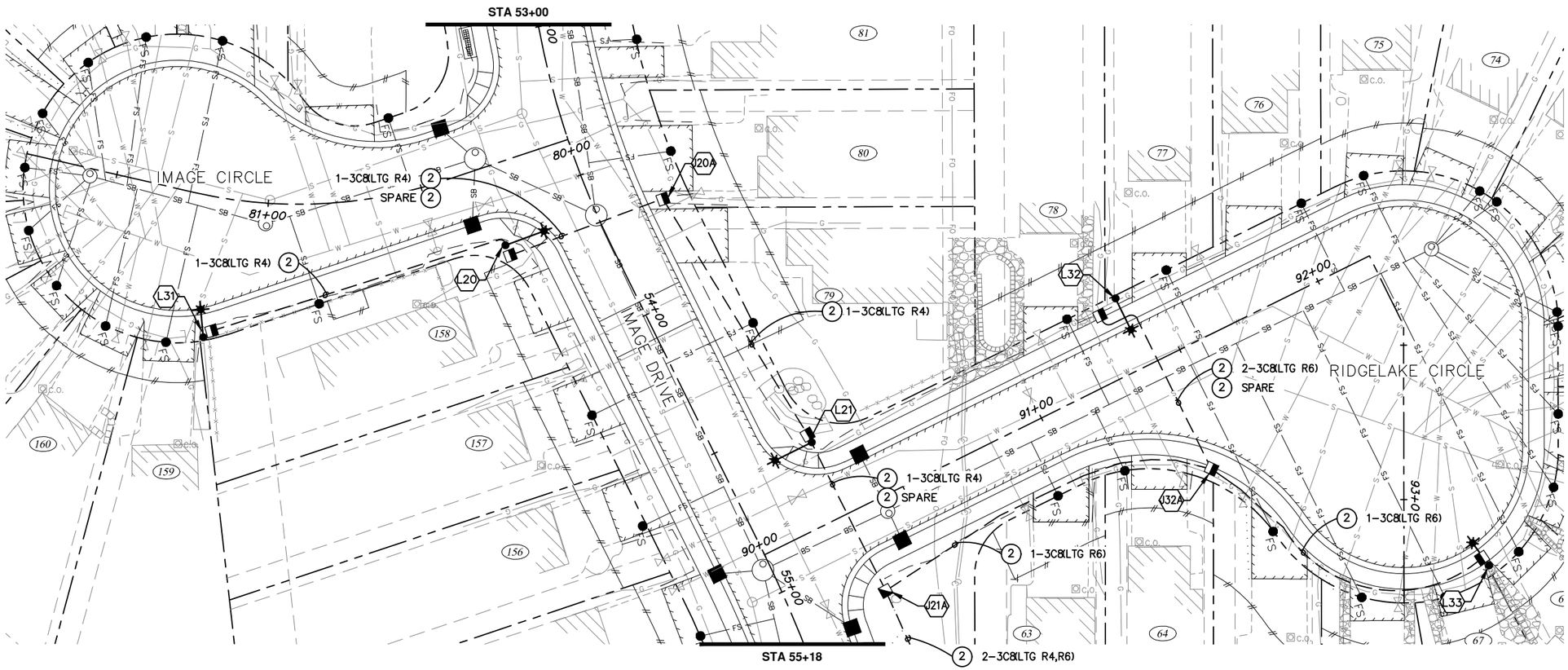

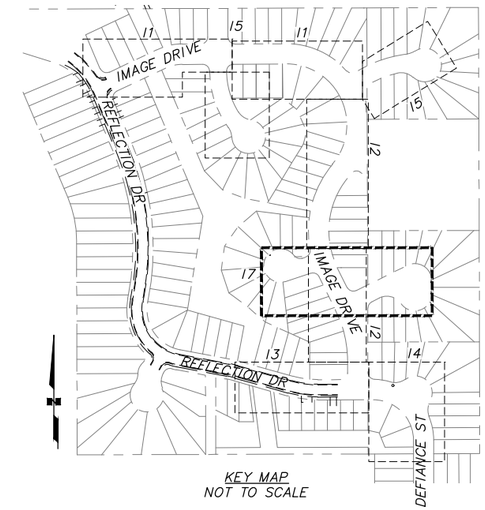

KEY MAP
NOT TO SCALE

RECORD DRAWING

1. DATA PROVIDED BY: _____ TITLE: _____
   THIS WILL SERVE TO CERTIFY THAT THESE RECORD DRAWINGS ARE A TRUE AND ACCURATE REPRESENTATION OF THE PROJECT AS CONSTRUCTED.
   CONTRACTOR: _____
   BY: _____ TITLE: _____ DATE: _____
2. DATA TRANSFERRED BY: _____ TITLE: _____
   COMPANY: _____ DATE: _____
3. BASED ON PERIODIC FIELD OBSERVATIONS BY THE ENGINEER (OR AN INDIVIDUAL UNDER HIS/HER DIRECT SUPERVISION), THE CONTRACTOR-PROVIDED DATA APPEARS TO REPRESENT THE PROJECT AS CONSTRUCTED.
   DATA TRANSFER CHECKED BY: _____ TITLE: _____
   COMPANY: _____ DATE: _____
   BY: _____

DATA	DRAWN BY	CHECKED BY
BASE	TS	MJ
TOPOGRAPHY	TS	MJ
PROFILE	RB	JK
STORM SEWER	JH	JK
WATER/SANITARY SEWER	MV	JK
GAS	MV	JK
TELEPHONE	MV	JK
ELECTRIC	TK	BM
DESIGN	RB	JK
QUANTITIES	RB	JK
PRELIMINARY/FINAL	RB	JK
MUNICIPAL/STATE	RB	JK

PLAN CHECK

GRAPHIC 40 20 0 20 40 SCALE

FIELD BOOKS	BM NO.	LOCATION	ELEV.
DESIGN CRW Books 147, 148, & 151	GAAB 66	See page D-24 of the MOA Benchmark Book	238.10
	GAAB 96	See page D-26 of the MOA Benchmark Book	313.83
STAKING			
ASBUILT			
CONTRACTOR	BASIS OF THIS DATUM GAAB 1972 ADJUST		
INSPECTOR			

CONSTRUCTION RECORD

VERTICAL DATUM

REV	DATE	DESCRIPTION	BY

REVISIONS

CRW ENGINEERING GROUP, LLC
3940 ARCTIC BLVD. SUITE 300
ANCHORAGE, ALASKA 99503
PHONE: (907) 562-3252
#AECL882-AK

CONSULTANT

STATE OF ALASKA 49TH Tyler R. Keene EE-14401 REGISTERED PROFESSIONAL ENGINEER

SEAL

MUNICIPALITY OF ANCHORAGE

PROJECT MANAGEMENT AND ENGINEERING DEPARTMENT

14-50 IMAGE DRIVE / REFLECTION DRIVE AREA ROAD RECONSTRUCTION - PHASE 2 SCHED C

ILLUMINATION IMPROVEMENTS

SCALE HOR. 1"=20' VER. N/A | GRID SW1638, SW1738 | DATE SEPT 2019 | STATUS 65% | SHEET 16 of 19

File: J:\JobsData\10133.00 Image Reflection Area Reconstruction\00 CADD\01 Working Set\03 Electrical\Phase 2\10133.00 Illumination - Phase 2.dwg

LIGHT LEVELS TABLE

LOCATION	*MOA REQUIRED MIN. AVERAGE ILLUMINANCE (FC)*	AVERAGE DESIGN ILLUMINANCE (FC)	*MOA REQUIRED MAXIMUM UNIFORMITY RATIO*	DESIGN UNIFORMITY RATIO	*MOA REQUIRED MAX. VEILING LUMINANCE RATIO*	DESIGN VEILING LUMINANCE RATIO
IMAGE DRIVE	*0.4*	0.7	*6.0:1*	4.1:1	*0.3:1*	0.1:1
IMAGE DRIVE/REFLECTION DRIVE INTX – NORTH	*0.8*	1.3	*6.0:1*	2.2:1	*N/A*	N/A
IMAGE DRIVE/REFLECTION DRIVE INTX – SOUTH	*0.8*	1.3	*6.0:1*	2.6:1	*N/A*	N/A
IMAGE DRIVE/MIRAGE CIRCLE INTX	*0.8*	1.0	*6.0:1*	2.4:1	*N/A*	N/A
IMAGE DRIVE/KEYANN CIRCLE INTX	*0.8*	1.3	*6.0:1*	2.7:1	*N/A*	N/A
IMAGE DRIVE/IMAGE CIRCLE INTX	*0.8*	1.0	*6.0:1*	2.0:1	*N/A*	N/A
IMAGE DRIVE/RIDGELAKE CIRCLE INTX	*0.8*	1.0	*6.0:1*	2.6:1	*N/A*	N/A
PEDESTRIAN FACILITIES	*0.4*	0.6	*4.0:1*	3.3:1	*N/A*	N/A

NOTES:

1. MOA REQUIREMENTS ARE FROM 2007 DCM CHAPTER 5 FOR A LOCAL ROADWAY WITH LOW PEDESTRIAN CONFLICT (MEDIUM DENSITY RESIDENTIAL).
2. LIGHT LOSS FACTOR (LLF) = 0.93.
3. MOUNTING HEIGHTS ARE 30'.

LUMINAIRE DEFINITION

TYPE	SYMBOL	MAKE	MODEL	LAMP	CCT*	DISTRIBUTION	VOLTAGE	DRIVE CURRENT	COLOR	OPTIONS	MOUNT
ROADWAY		CREE	LEDWAY	SEE LUMINAIRE SCHEDULE	4000K	SEE LUMINAIRE SCHEDULE	240	525mA	SILVER	7–PIN RECEPTACLE, BACKLIGHT SHIELD	MAST ARM

*CCT = CORRELATED COLOR TEMPERATURE

ROADWAY LUMINAIRE SCHEDULE

POLE	STATION	OFFSET	SHAFT LENGTH	MAST ARM LENGTH	# OF LED	DISTRIBUTION	CIRCUIT
L11	41+83.1	23.48 LT	28'	8'	40	MEDIUM, TYPE 2	T5
L12	43+48.6	30.70 LT	26'	13'	60	MEDIUM, TYPE 2	T3
L13	44+88.6	24.83 LT	27'	10'	40	MEDIUM, TYPE 2	T3
L14	46+30.9	22.80 LT	28'	9'	40	MEDIUM, TYPE 2	T3
L15	47+07.4	28.01 RT	27'	13'	40	MEDIUM, TYPE 2	T1
L16	47+69.0	26.68 LT	28'	9'	40	MEDIUM, TYPE 2	T1
L17	49+02.4	28.50 RT	26'	13'	40	MEDIUM, TYPE 2	T1
L18	50+61.5	27.77 RT	27'	12'	40	MEDIUM, TYPE 2	T1
L19	52+01.4	28.00 RT	27'	11'	40	MEDIUM, TYPE 2	T1
L20	53+61.2	31.20 RT	26'	13'	60	MEDIUM, TYPE 2	R4
L21	54+60.8	29.86 LT	27'	12'	60	MEDIUM, TYPE 2	R4
L22	56+32.4	24.66 LT	28'	9'	40	MEDIUM, TYPE 2	R6
L23	26+09.5	28.02 LT	26'	13'	40	MEDIUM, TYPE 2	R3
L24	26+91.6	73.33 LT	28'	9'	60	MEDIUM, TYPE 3	R3
L25	27+58.8	28.89 LT	26'	14'	40	MEDIUM, TYPE 2	R3
L26	28+55.9	25.00 LT	27'	10'	40	MEDIUM, TYPE 2	R3
L27	63+04.5	23.17 RT	28'	9'	40	MEDIUM, TYPE 2	T4
L28	64+38.5	39.02 LT	28'	9'	60	MEDIUM, TYPE 4	T4
L29	70+41.6	23.25 LT	28'	9'	40	MEDIUM, TYPE 2	T3
L30	72+23.2	42.75 LT	28'	9'	60	MEDIUM, TYPE 4	T3
L31	81+14.3	44.36 LT	28'	8'	80	MEDIUM, TYPE 4	R4
L32	91+34.5	21.27 LT	28'	10'	60	MEDIUM, TYPE 2	R6
L33	93+21.4	27.55 LT	28'	8'	60	MEDIUM, TYPE 4	R6

JUNCTION BOX SCHEDULE

J–BOX	TYPE	CIRCUIT	STATION	OFFSET
J12A	1A	T1,T3	44+05.1	28.92 LT
J12B	1A	T4	43+44.6	26.39 RT
J15A	1A	T3	47+73.6	23.90 RT
J20A	1A	R4	53+68.1	21.55 LT
J21A	2	R4,R6	55+12.3	31.02 LT
J22A	2	R3,R4,R6	57+10.7	26.91 LT
J27A	1A	T4	63+15.5	20.50 LT
J32A	1A	R6	91+42.1	39.19 RT

NOTE: ONLY JUNCTION BOXES NOT ASSOCIATED WITH AN ELECTROLIER OR LOAD CENTER ARE SHOWN IN THIS TABLE.

ILLUMINATION NOTES:

1. *PROVIDE HOT DIP GALVANIZED STEEL POLES WITH MAST ARMS PER MOA STANDARDS DETAIL 80–19 AND 80–20, RESPECTIVELY.*
2. *ALL LUMINAIRE POLE FOUNDATIONS SHALL BE DRIVEN PILE UNLESS OTHERWISE NOTED ON THE DRAWINGS. LUMINAIRE POLE FOUNDATION SHALL BE LOCATED A MINIMUM OF 3 FEET FROM BACK OF SIDEWALK OR PATHWAY. WHEN POLE LOCATION IS WITHIN 10' OF A UTILITY, EXCAVATE A HOLE TO 12" BELOW ANTICIPATED UTILITIES DEPTH WITH A VACTOR TRUCK BEFORE DRIVING PILE. SEE MASS DETAIL 80–13.*
3. *INSTALL THE POLES WITH FIXED BASES PER MOA DETAIL 80–21.*
4. *LUMINAIRES APPROVED FOR SUBSTITUTION SHALL PROVIDE THE LIGHT LEVELS AND UNIFORMITIES INDICATED IN THE LIGHT LEVELS TABLE.*
5. *PROVIDE THE POLE SHAFT LENGTHS AND MAST ARM LENGTHS SHOWN IN THE POLE SCHEDULE.*
6. *PROVIDE RIGID METAL CONDUIT (RMC) WITH A BARE, STRANDED #8 AWG COPPER GROUND FOR ALL RACEWAYS.*
7. *PROVIDE ONE SPARE 2" RMC WITH PULL ROPE BETWEEN THE JUNCTION BOXES ADJACENT TO EVERY ROAD CROSSING.*
8. *PROVIDE A 3 CONDUCTOR CABLE FOR EACH BRANCH CIRCUIT. SIZE AS SHOWN ON THE DRAWINGS.*
9. *CONNECT NEW CONDUCTORS TO EXISTING CONDUCTORS AT DISCONNECT INSIDE HANDHOLE TO POWER NEW LUMINAIRES.*
10. *INSTALL THE JUNCTION BOX WITHIN 3' OF THE POLE OR LOAD CENTER. DO NOT INSTALL JUNCTION BOXES IN SIDEWALKS, PATHWAYS OR TRAILS. JUNCTION BOXES INSTALLED BEHIND SIDEWALKS, PATHWAYS OR TRAILS SHALL HAVE A MINIMUM SETBACK OF 2' AND BE PLACED BEHIND OR ON THE DOWN TRAFFIC SIDE OF FOUNDATIONS.*
11. *IN THE DRAWINGS, EACH JUNCTION BOX HAS THE SAME IDENTIFYING NUMBER AS THE LIGHT POLE OR LOAD CENTER NEXT TO IT. FOR JUNCTION BOXES LOCATED BETWEEN POLES, THE IDENTIFYING NUMBER INCLUDES THE SMALLER OF THE TWO POLE NUMBERS BETWEEN WHICH THE JUNCTION BOX IS LOCATED AND AN "A" OR "B" SUFFIX.*

LEGEND

EXISTING	*PROPOSED*	
		CONDUIT/WIRE RUN BELOW GRADE
		LUMINAIRE
		TYPE 1A JUNCTION BOX
		TYPE 2 JUNCTION BOX
		TYPE 1A LOAD CENTER

(2) 1–3C8(LTG T3)

CONDUIT SIZE
OF CABLES
OF CONDUCTORS PER CABLE
SIZE OF CONDUCTORS
TYPE OF CIRCUIT
CIRCUIT #

NEW CONDUIT/CONDUCTOR TAG

(2) 1–3C8(LTG R4)

CONDUIT SIZE
OF CABLES
OF CONDUCTORS PER CABLE
SIZE OF CONDUCTORS
TYPE OF CIRCUIT
CIRCUIT #

EXISTING CONDUIT/ NEW CONDUCTOR TAG

RECORD DRAWING

1. DATA PROVIDED BY: _____ TITLE: _____
   THIS WILL SERVE TO CERTIFY THAT THESE RECORD DRAWINGS ARE A TRUE AND ACCURATE REPRESENTATION OF THE PROJECT AS CONSTRUCTED.
   CONTRACTOR: _____
   BY: _____ TITLE: _____ DATE: _____
2. DATA TRANSFERRED BY: _____ TITLE: _____
   COMPANY: _____ DATE: _____
3. BASED ON PERIODIC FIELD OBSERVATIONS BY THE ENGINEER (OR AN INDIVIDUAL UNDER HIS/HER DIRECT SUPERVISION), THE CONTRACTOR–PROVIDED DATA APPEARS TO REPRESENT THE PROJECT AS CONSTRUCTED.
   DATA TRANSFER CHECKED BY: _____ TITLE: _____
   COMPANY: _____ DATE: _____
   BY: _____

DATA	DRAWN BY	CHECKED BY
BASE	TS	MJ
TOPOGRAPHY	TS	MJ
PROFILE	RB	JK
STORM SEWER	JH	JK
WATER/SANITARY SEWER	MV	JK
GAS	MV	JK
TELEPHONE	MV	JK
ELECTRIC	TK	BM
DESIGN	RB	JK
QUANTITIES	RB	JK
PRELIMINARY/FINAL	RB	JK
MUNICIPAL/STATE	RB	JK

PLAN CHECK

FIELD BOOKS
DESIGN CRW Books 147, 148, & 151
STAKING
ASBUILT
CONTRACTOR
INSPECTOR

CONSTRUCTION RECORD

BM NO.	LOCATION	ELEV.
GAAB 66	See page D–24 of the MOA Benchmark Book	238.10
GAAB 96	See page D–26 of the MOA Benchmark Book	313.83

BASIS OF THIS DATUM GAAB 1972 ADJUST

VERTICAL DATUM

REV	DATE	DESCRIPTION	BY

REVISIONS

CRW ENGINEERING GROUP, LLC
3940 ARCTIC BLVD. SUITE 300
ANCHORAGE, ALASKA 99503
PHONE: (907) 562–3252
#ECL882–AK

CONSULTANT

STATE OF ALASKA 49TH Tyler R. Keene EE-14401 REGISTERED PROFESSIONAL ENGINEER

SEAL

MUNICIPALITY OF ANCHORAGE

PROJECT MANAGEMENT AND ENGINEERING DEPARTMENT

14–50 IMAGE DRIVE / REFLECTION DRIVE AREA ROAD RECONSTRUCTION – PHASE 2 SCHED C

ILLUMINATION NOTES, SCHEDULES, AND DETAILS

SCALE HOR. N/A VER. N/A | GRID SW1638, SW1738 | DATE SEPT 2019 | STATUS 65% | SHEET 17 of 19

File: J:\JobsData\10133.00 Image Reflection Area Reconstruction\00 CADD\01 Working Set\03 Electrical\Phase 2\10133.00 Illumination – Phase 2 Legend And Schedules.dwg

NEW CIRCUIT VOLTAGE DROPS					
CIRCUIT	SIZE	LENGTH	VOLTAGE	CURRENT	V.D.
R3	#8 AWG	895	240V	2.21	1.20%
R4	#8 AWG	790	240V	1.48	0.71%
R6	#8 AWG	965	240V	1.01	0.59%

LOAD CENTER NO. R (EXISTING) TYPE: 1A

LOCATION: STATION – 22+44.38, OFFSET – 25.35 RT, REFLECTION DRIVE

2–8 POLE, 30 AMP CONTACTORS

MAIN BREAKER A: 2 POLE, 100 AMPS, 240 VOLTS

PANEL A 120/240 VOLTS SINGLE PHASE 3 WIRE

100 AMPS MAIN LUGS, 10,000 AMPS INTERRUPT CAPACITY

CKT.	CIRCUIT DESCRIPTION	KVA	AMP		AMP	KVA	CIRCUIT DESCRIPTION	CKT.
R1	EXISTING ELECTROLIERS	0.7	20/2	1 2	15/2	0.2	PHOTOELECTRIC CONTROL	R2
R3	EXISTING ELECTROLIERS, ELECTROLIERS L23–L26	0.5	20/2	3 4	20/2	0.4	**ELECTROLIERS L20, L21, L31**	R4
R5	SPARE	0.0	20/2	5 6	20/2	0.2	**ELECTROLIERS L22, L32, L33**	R6
R7	SPARE	0.0	20/2	7 8				
				9 10				
				11 12				
				13 14				
				15 16				
				17 18				
				19 20				

TOTAL CONNECTED LOAD = 2.1 KVA

TOTAL AMPS = 8.6 A

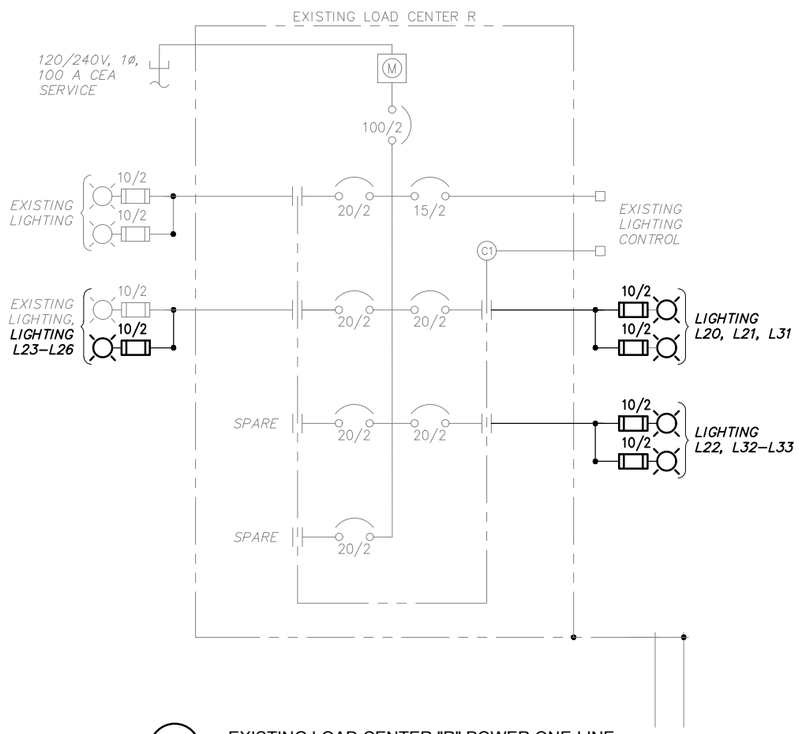

1 EXISTING LOAD CENTER "R" POWER ONE-LINE

NTS

RECORD DRAWING

1. DATA PROVIDED BY: _____ TITLE: _____
   THIS WILL SERVE TO CERTIFY THAT THESE RECORD DRAWINGS ARE A TRUE AND ACCURATE REPRESENTATION OF THE PROJECT AS CONSTRUCTED.
   CONTRACTOR: _____
   BY: _____ TITLE: _____ DATE: _____
2. DATA TRANSFERRED BY: _____ TITLE: _____
   COMPANY: _____ DATE: _____
3. BASED ON PERIODIC FIELD OBSERVATIONS BY THE ENGINEER (OR AN INDIVIDUAL UNDER HIS/HER DIRECT SUPERVISION), THE CONTRACTOR–PROVIDED DATA APPEARS TO REPRESENT THE PROJECT AS CONSTRUCTED.
   DATA TRANSFER CHECKED BY: _____ TITLE: _____
   COMPANY: _____ DATE: _____
   BY: _____

DATA	DRAWN BY	CHECKED BY
BASE	TS	MJ
TOPOGRAPHY	TS	MJ
PROFILE	RB	JK
STORM SEWER	JH	JK
WATER/SANITARY SEWER	MV	JK
GAS	MV	JK
TELEPHONE	MV	JK
ELECTRIC	TK	BM
DESIGN	RB	JK
QUANTITIES	RB	JK
PRELIMINARY/FINAL	RB	JK
MUNICIPAL/STATE	RB	JK

PLAN CHECK

FIELD BOOKS	BM NO.	LOCATION	ELEV.
DESIGN CRW Books 147, 148, & 151	GAAB 66	See page D–24 of the MOA Benchmark Book	238.10
	GAAB 96	See page D–26 of the MOA Benchmark Book	313.83
STAKING			
ASBUILT			
CONTRACTOR	BASIS OF THIS DATUM GAAB 1972 ADJUST		
INSPECTOR			

CONSTRUCTION RECORD — VERTICAL DATUM

REV	DATE	DESCRIPTION	BY

REVISIONS

CRW ENGINEERING GROUP, LLC
3940 ARCTIC BLVD. SUITE 300
ANCHORAGE, ALASKA 99503
PHONE: (907) 562–3252
#AECL882–AK

CONSULTANT

STATE OF ALASKA 49TH REGISTERED PROFESSIONAL ENGINEER Tyler R. Keene EE-14401

SEAL

MUNICIPALITY OF ANCHORAGE

PROJECT MANAGEMENT AND ENGINEERING DEPARTMENT

14–50 IMAGE DRIVE / REFLECTION DRIVE AREA ROAD RECONSTRUCTION – PHASE 2 SCHED C

LC–R POWER ONE–LINE, PANEL SCHEDULE, AND CONTROL SCHEMATIC

SCALE HOR. N/A VER. N/A | GRID SW1638, SW1738 | DATE SEPT 2019 | STATUS 65% | SHEET 18 of 19

File: J:\JobsData\10133.00 Image Reflection Area Reconstruction\00 CADD\01 Working Set\03 Electrical\Phase 2\10133.00 Illumination – Phase 2 Load Center Details.dwg

VOLTAGE DROPS					
CIRCUIT	SIZE	LENGTH	VOLTAGE	CURRENT	V.D.
T1	#8 AWG	663	240V	1.45	0.58%
T3	#8 AWG	1159	240V	1.73	1.22%
T4	#8 AWG	461	240V	0.72	0.20%
T5	#8 AWG	240	240V	0.29	0.01%

LOAD CENTER NO. T TYPE: 1A

LOCATION: STATION – 42+14.00, OFFSET – 27.5 LT, IMAGE DRIVE

2–8 POLE, 30 AMP CONTACTORS

MAIN BREAKER A: 2 POLE, 100 AMPS, 240 VOLTS

PANEL A 120/240 VOLTS SINGLE PHASE 3 WIRE

100 AMPS MAIN LUGS, 10,000 AMPS INTERRUPT CAPACITY

CKT.	CIRCUIT DESCRIPTION	KVA	AMP		AMP	KVA	CIRCUIT DESCRIPTION	CKT.
T1	ELECTROLIERS L15–L19	0.4	20/2	1 2	15/2	0.2	PHOTOELECTRIC CONTROL	T2
T3	ELECTROLIERS L12–L14, L29,L30	0.5	20/2	3 4	20/2	0.2	ELECTROLIERS L27, L28	T4
T5	ELECTROLIER L11	0.1	20/2	5 6	20/2	0.0	SPARE	T6
T7	SPARE	0.0	20/2	7 8				
				9 10				
				11 12				
				13 14				
				15 16				
				17 18				
				19 20				

TOTAL CONNECTED LOAD = 1.3 KVA

TOTAL AMPS = 5.6 A

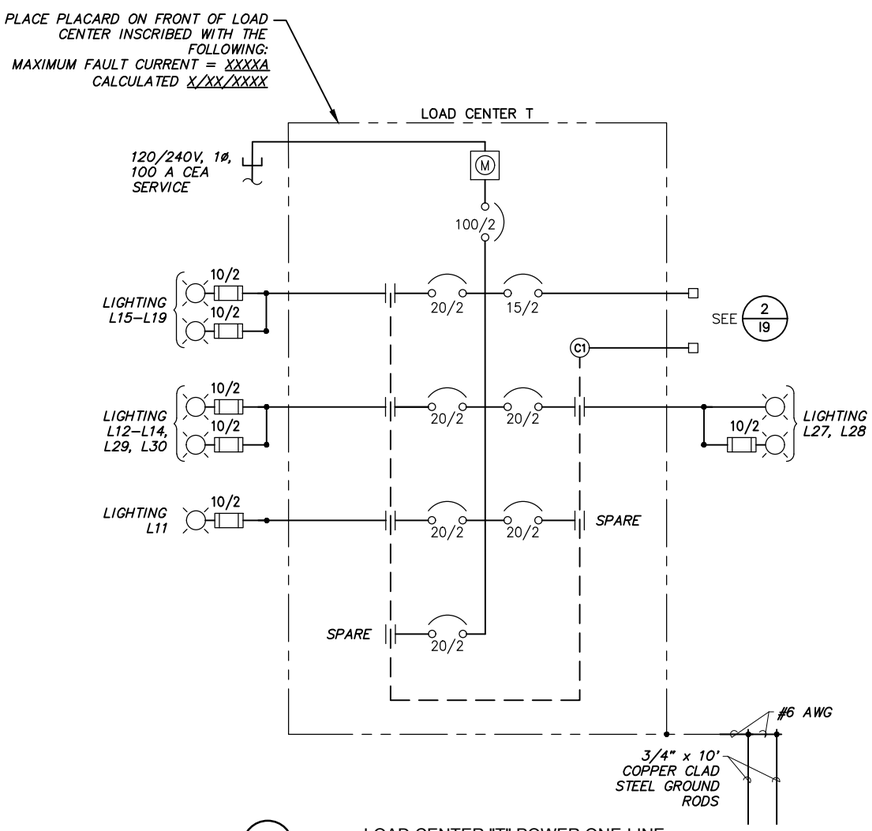

1 LOAD CENTER "T" POWER ONE-LINE

NTS

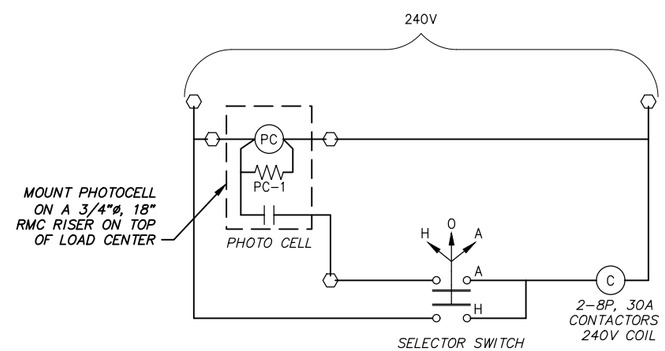

2 LOAD CENTER LIGHTING CONTROL SCHEMATIC

NTS

LOAD CENTER NOTES:

1. PLACARDS FOR LOAD CENTERS SHALL HAVE SUFFICIENT DURABILITY TO WITHSTAND THE ENVIRONMENT INVOLVED. CONTACT ENGINEER PRIOR TO ORDER OF PLACARD TO VERIFY MAXIMUM FAULT CURRENT.
2. LABEL THE FRONT WITH 3M SCOTCH CAL REFLECTIVE DECALS NOTING OWNERSHIP: MOA, PURPOSE: LU (ILLUMINATION) AND THE VOLTAGE.
3. PROVIDE ARC FLASH WARNING LABELS WITH INCIDENT ENERGY VALUES AND PERSONAL PROTECTIVE EQUIPMENT (PPE) ON EACH PIECE OF EQUIPMENT IN ACCORDANCE WITH NEC ARTICLE 110.16 AND NFPA 70E.

RECORD DRAWING

1. DATA PROVIDED BY: _____ TITLE: _____
THIS WILL SERVE TO CERTIFY THAT THESE RECORD DRAWINGS ARE A TRUE AND ACCURATE REPRESENTATION OF THE PROJECT AS CONSTRUCTED.
CONTRACTOR: _____
BY: _____ TITLE: _____ DATE: _____
2. DATA TRANSFERRED BY: _____ TITLE: _____
COMPANY: _____ DATE: _____
3. BASED ON PERIODIC FIELD OBSERVATIONS BY THE ENGINEER (OR AN INDIVIDUAL UNDER HIS/HER DIRECT SUPERVISION), THE CONTRACTOR–PROVIDED DATA APPEARS TO REPRESENT THE PROJECT AS CONSTRUCTED.
DATA TRANSFER CHECKED BY: _____ TITLE: _____
COMPANY: _____ DATE: _____
BY: _____

DATA	DRAWN BY	CHECKED BY
BASE	TS	MJ
TOPOGRAPHY	TS	MJ
PROFILE	RB	JK
STORM SEWER	JH	JK
WATER/SANITARY SEWER	MV	JK
GAS	MV	JK
TELEPHONE	MV	JK
ELECTRIC	TK	BM
DESIGN	RB	JK
QUANTITIES	RB	JK
PRELIMINARY/FINAL	RB	JK
MUNICIPAL/STATE	RB	JK

PLAN CHECK

FIELD BOOKS
DESIGN CRW Books 147, 148, & 151
STAKING
ASBUILT
CONTRACTOR
INSPECTOR

CONSTRUCTION RECORD

BM NO.	LOCATION	ELEV.
GAAB 66	See page D–24 of the MOA Benchmark Book	238.10
GAAB 96	See page D–26 of the MOA Benchmark Book	313.83

BASIS OF THIS DATUM GAAB 1972 ADJUST

VERTICAL DATUM

REV	DATE	DESCRIPTION	BY

REVISIONS

CRW ENGINEERING GROUP, LLC
3940 ARCTIC BLVD. SUITE 300
ANCHORAGE, ALASKA 99503
PHONE: (907) 562–3252
#AECL882–AK

CONSULTANT

STATE OF ALASKA 49 TH REGISTERED PROFESSIONAL ENGINEER Tyler R. Keene EE-14401

SEAL

MUNICIPALITY OF ANCHORAGE

PROJECT MANAGEMENT AND ENGINEERING DEPARTMENT

14–50 IMAGE DRIVE / REFLECTION DRIVE AREA ROAD RECONSTRUCTION – PHASE 2 SCHED C

LC–T POWER ONE–LINE, PANEL SCHEDULE, AND CONTROL SCHEMATIC

SCALE HOR. N/A VER. N/A | GRID SW1638, SW1738 | DATE SEPT 2019 | STATUS 65% | SHEET 19 of 19

File: J:\JobsData\10133.00 Image Reflection Area Reconstruction\00 CADD\01 Working Set\03 Electrical\Phase 2\10133.00 Illumination – Phase 2 Load Center Details.dwg

NOTES:
1. SEE SHEET E3 FOR HEAT TRACE NOTES.

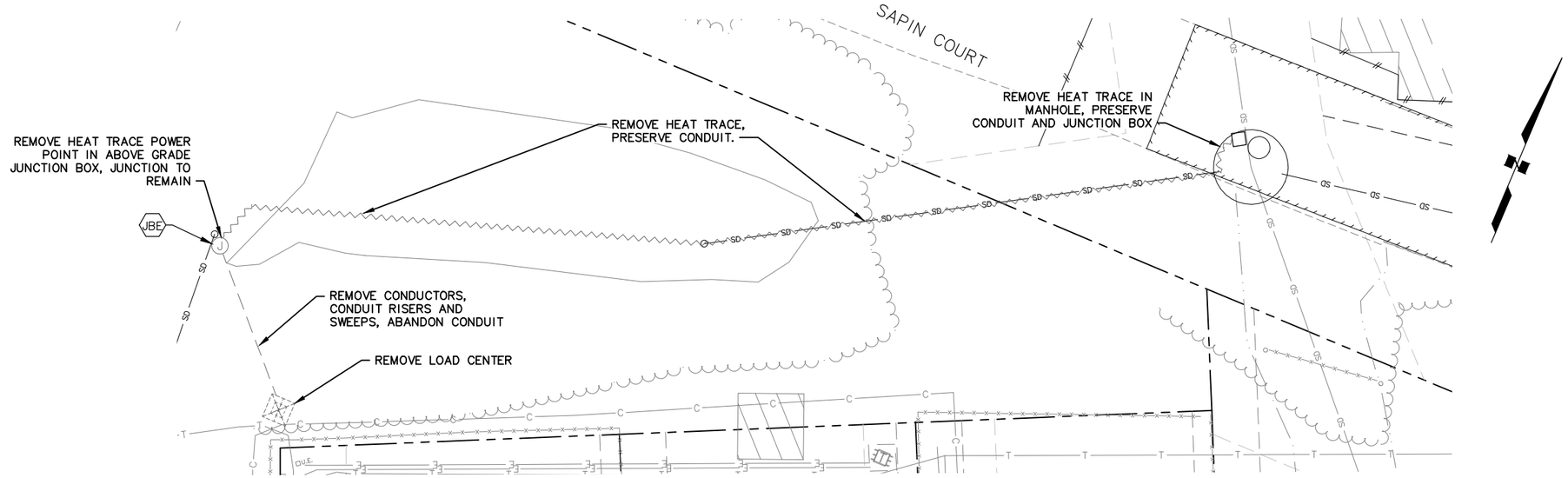

1 HEAT TRACE DEMOLITION PLAN NORTH

SCALE: SEE GRAPHIC SCALE

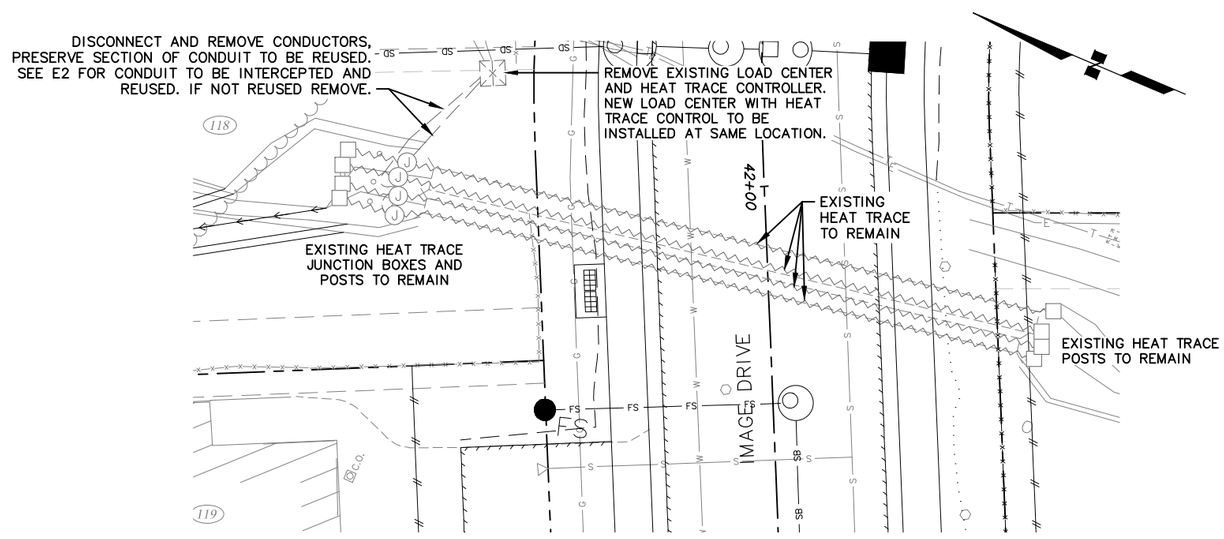

2 HEAT TRACE DEMOLITION PLAN SOUTH

SCALE: SEE GRAPHIC SCALE

ELECTRICAL PLAN LEGEND

EXISTING	PROPOSED	
		UNDERGROUND CONDUIT
		HEAT TRACE
		ELECTRIC JB TYPE IA
		ELECTRIC JB TYPE II
		ABOVE GRADE JUNCTION BOX
		LOAD CENTER
		HEAT TRACE END KIT

(2) 1–3C8(LTG X1)

CONDUIT SIZE — # OF CABLES — # OF CONDUCTORS PER CABLE — SIZE OF CONDUCTORS — TYPE OF CIRCUIT — CIRCUIT #

NEW CONDUIT/CONDUCTOR TAG

(2) 1–3C8(LTG X1)

CONDUIT SIZE — # OF CABLES — # OF CONDUCTORS PER CABLE — SIZE OF CONDUCTORS — TYPE OF CIRCUIT — CIRCUIT #

EXISTING CONDUIT/ NEW CONDUCTOR TAG

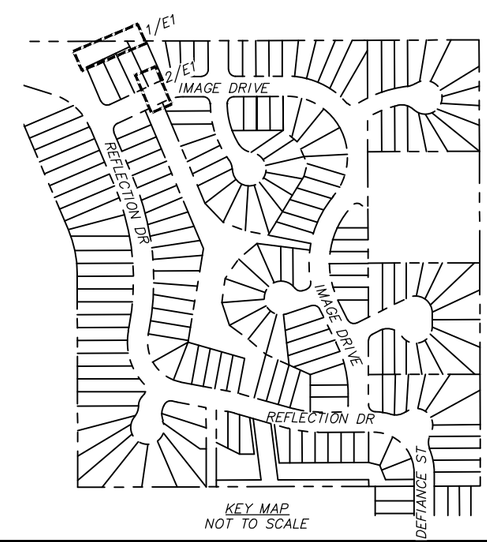

KEY MAP
NOT TO SCALE

RECORD DRAWING

1. DATA PROVIDED BY: _____ TITLE: _____
THIS WILL SERVE TO CERTIFY THAT THESE RECORD DRAWINGS ARE A TRUE AND ACCURATE REPRESENTATION OF THE PROJECT AS CONSTRUCTED.
CONTRACTOR: _____
BY: _____ TITLE: _____ DATE: _____
2. DATA TRANSFERRED BY: _____ TITLE: _____
COMPANY: _____ DATE: _____
3. BASED ON PERIODIC FIELD OBSERVATIONS BY THE ENGINEER (OR AN INDIVIDUAL UNDER HIS/HER DIRECT SUPERVISION), THE CONTRACTOR–PROVIDED DATA APPEARS TO REPRESENT THE PROJECT AS CONSTRUCTED.
DATA TRANSFER CHECKED BY: _____ TITLE: _____
COMPANY: _____ DATE: _____
BY: _____

DATA	DRAWN BY	CHECKED BY
BASE	TS	MJ
TOPOGRAPHY	TS	MJ
PROFILE	RB	JK
STORM SEWER	JH	JK
WATER/SANITARY SEWER	MV	JK
GAS	MV	JK
TELEPHONE	MV	JK
ELECTRIC	TK	BM
DESIGN	RB	JK
QUANTITIES	RB	JK
PRELIMINARY/FINAL	RB	JK
MUNICIPAL/STATE	RB	JK

PLAN CHECK

GRAPHIC 20 10 0 10 20 SCALE

FIELD BOOKS	
DESIGN	CRW Books 147, 148, & 151
STAKING	
ASBUILT	
CONTRACTOR	
INSPECTOR	

CONSTRUCTION RECORD

BM NO.	LOCATION	ELEV.
GAAB 66	See page D–24 of the MOA Benchmark Book	238.10
GAAB 96	See page D–26 of the MOA Benchmark Book	313.83

BASIS OF THIS DATUM GAAB 1972 ADJUST

VERTICAL DATUM

REV	DATE	DESCRIPTION	BY

REVISIONS

CRW ENGINEERING GROUP, LLC
3940 ARCTIC BLVD. SUITE 300
ANCHORAGE, ALASKA 99503
PHONE: (907) 562–3252
#AECL882–AK

CONSULTANT

STATE OF ALASKA 49TH Tyler R. Keene EE-14401 REGISTERED PROFESSIONAL ENGINEER

SEAL

MUNICIPALITY OF ANCHORAGE

PROJECT MANAGEMENT AND ENGINEERING DEPARTMENT

14–50 IMAGE DRIVE / REFLECTION DRIVE AREA ROAD RECONSTRUCTION – PHASE 2 SCHED B

HEAT TRACE DEMOLITION PLAN

SCALE HOR. 1"=10' VER. N/A | GRID SW1638, SW1738 | DATE SEPT 2019 | STATUS 65% | SHEET E1 of E8

File:J:\JobsData\10133.00 Image Reflection Area Reconstruction\00 CADD\01 Working Set\03 Electrical\Phase 2\Heat Trace\10133.00 Heat Trace – Phase 2.dwg

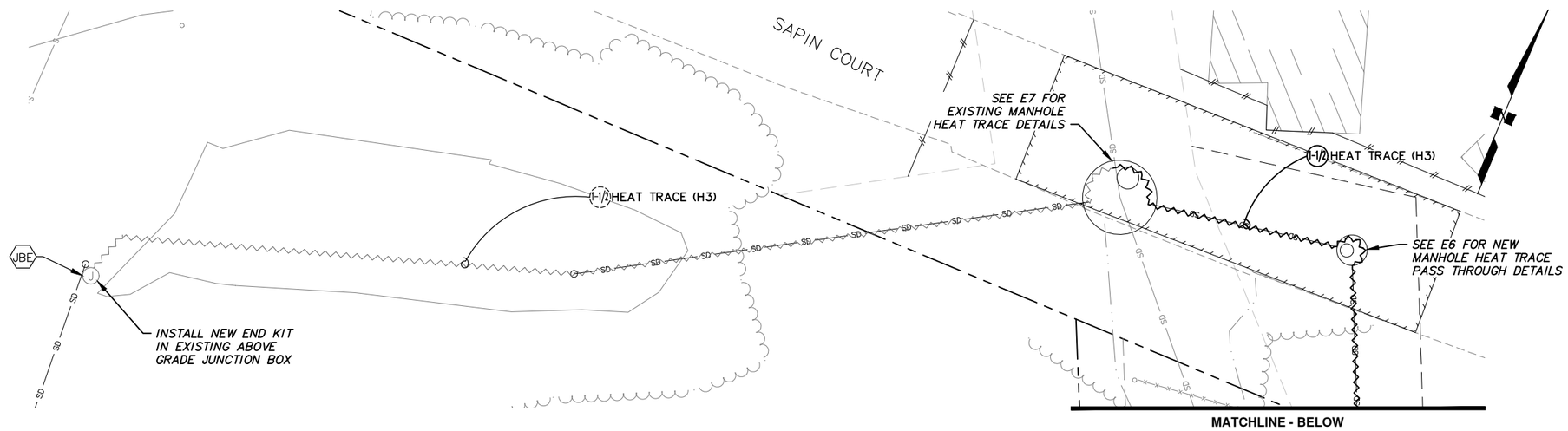

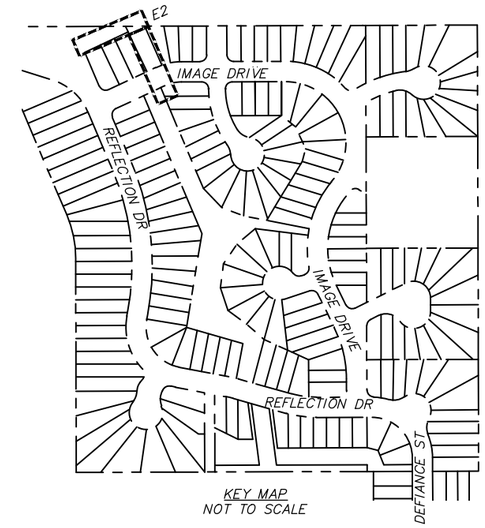

KEY MAP
NOT TO SCALE

NOTES:
1. SEE SHEET E3 FOR HEAT TRACE NOTES.
2. INTERCEPT EXISTING CONDUIT WITH NEW CONDUIT. CONNECT NEW/EXISTING CONDUIT WITH SHUR-LOCK II COUPLER.

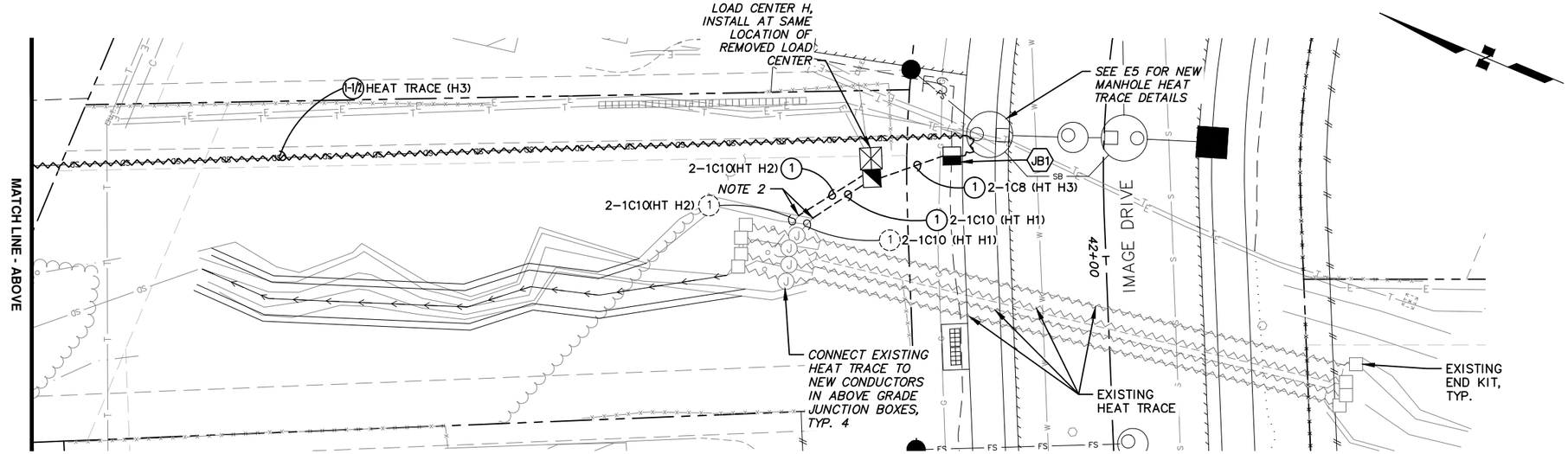

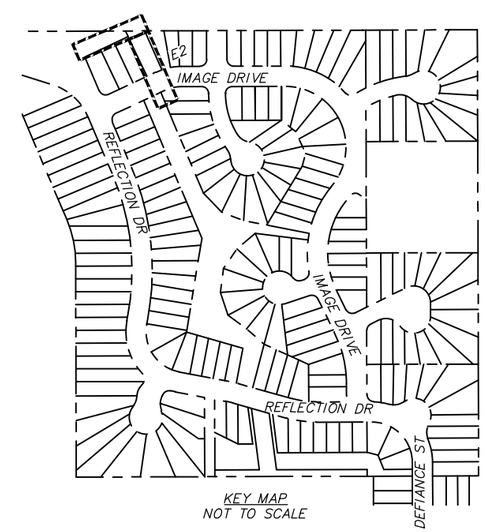

KEY MAP
NOT TO SCALE

RECORD DRAWING

1. DATA PROVIDED BY: _____ TITLE: _____
   THIS WILL SERVE TO CERTIFY THAT THESE RECORD DRAWINGS ARE A TRUE AND ACCURATE REPRESENTATION OF THE PROJECT AS CONSTRUCTED.
   CONTRACTOR: _____
   BY: _____ TITLE: _____ DATE: _____
2. DATA TRANSFERRED BY: _____ TITLE: _____
   COMPANY: _____ DATE: _____
3. BASED ON PERIODIC FIELD OBSERVATIONS BY THE ENGINEER (OR AN INDIVIDUAL UNDER HIS/HER DIRECT SUPERVISION), THE CONTRACTOR-PROVIDED DATA APPEARS TO REPRESENT THE PROJECT AS CONSTRUCTED.
   DATA TRANSFER CHECKED BY: _____ TITLE: _____
   COMPANY: _____ DATE: _____
   BY: _____

DATA	DRAWN BY	CHECKED BY
BASE	TS	MJ
TOPOGRAPHY	TS	MJ
PROFILE	RB	JK
STORM SEWER	JH	JK
WATER/SANITARY SEWER	MV	JK
GAS	MV	JK
TELEPHONE	MV	JK
ELECTRIC	TK	BM
DESIGN	RB	JK
QUANTITIES	RB	JK
PRELIMINARY/FINAL	RB	JK
MUNICIPAL/STATE	RB	JK

PLAN CHECK

GRAPHIC SCALE 20 10 0 10 20

FIELD BOOKS	BM NO.	LOCATION	ELEV.
DESIGN CRW Books 147, 148, & 151	GAAB 66	See page D-24 of the MOA Benchmark Book	238.10
	GAAB 96	See page D-26 of the MOA Benchmark Book	313.83
STAKING			
ASBUILT			
CONTRACTOR	BASIS OF THIS DATUM GAAB 1972 ADJUST		
INSPECTOR			

CONSTRUCTION RECORD — VERTICAL DATUM

REV	DATE	DESCRIPTION	BY

REVISIONS

CRW ENGINEERING GROUP, LLC
3940 ARCTIC BLVD. SUITE 300
ANCHORAGE, ALASKA 99503
PHONE: (907) 562-3252
#AECL882-AK
CONSULTANT

STATE OF ALASKA 49TH Tyler R. Keene EE-14401 REGISTERED PROFESSIONAL ENGINEER
SEAL

MUNICIPALITY OF ANCHORAGE

PROJECT MANAGEMENT AND ENGINEERING DEPARTMENT

14-50 IMAGE DRIVE / REFLECTION DRIVE AREA ROAD RECONSTRUCTION – PHASE 2 SCHED B

HEAT TRACE REMODEL PLAN

SCALE HOR. 1"=10' VER. N/A | GRID SW1638, SW1738 | DATE SEPT 2019 | STATUS 65% | SHEET E2 of E8

File: J:\JobsData\10133.00 Image Reflection Area Reconstruction\00 CADD\01 Working Set\03 Electrical\Phase 2\Heat Trace\10133.00 Heat Trace – Phase 2.dwg

HEAT TRACE CONSTRUCTION NOTES

1. PROVIDE A HEAT TRACE CONTROLLER IN THE LOAD CENTER ENCLOSURE AT EACH LOCATION INDICATED ON THE DRAWINGS. INSTALL THE ENCLOSURE WITH THE DOOR FACING THE ADJACENT STREET.
2. INSTALL RIGID STEEL CONDUIT WITH A #8 AWG EQUIPMENT GROUNDING CONDUCTOR AND TWO XHHW-2 CONDUCTORS FOR EACH HEAT TRACE CIRCUIT BETWEEN THE CONTROLLER ENCLOSURE AND THE SERVING JUNCTION BOX. SIZE CONDUCTORS AND CONDUIT AS SHOWN ON THE PLANS.
3. PROVIDE SEAL-OFF FITTINGS IN THE SERVING JUNCTION BOX ON THE CONDUITS THAT ENTER THE CULVERTS, PIPES, AND MANHOLES.
4. INSTALL HEAT TRACE CAUTION SIGNS, PER DETAIL 4/E4, AT EACH MANHOLE. EMBED MARKERS 24" IN SOIL.
5. INSTALL HEAT TRACE CONDUIT IN PIPES PER DETAILS 2/E4.
6. PROVIDE COMPLETED HEAT TRACE INSTALLATION RECORD (SEE MANUFACTURER'S INSTALLATION GUIDE FOR FORM) FOR FINAL ACCEPTANCE OF ALL HEAT TRACE RUNS.

HEAT TRACE CONTROLLER MATERIALS LIST

1. 2 POLE MAIN CIRCUIT BREAKER, SIZE AS SHOWN IN THE PANEL SCHEDULES.
2. 15/1 CONTROL BREAKER AND CLASS B GROUND FAULT CIRCUIT INTERRUPTERS FOR HEAT TRACE CIRCUITS. HEAT TRACE CIRCUIT SIZES AS SHOWN IN THE PANEL SCHEDULES.
3. SELECTOR SWITCH: SINGLE POLE – 3 POSITION WITH CONTACTS RATED 10 AMPS AT 120 VOLTS. LABEL THE SWITCH "HEAT TRACE CONTROL" AND THE SWITCH POSITIONS H = "ON", O = "OFF", A = "THERMOSTAT"
4. REMOTE BULB THERMOSTAT: OPEN ON RISE, SPDT REMOTE BULB THERMOSTAT. WHITE RODGERS "1687-9" OR EQUAL.
5. ENCLOSURE HEATER: 800W THERMOSTATICALLY CONTROLLED 120V FAN-DRIVEN HEATER. HOFFMAN "D-AH8001B" OR EQUAL.
6. PILOT LIGHT: 120 VOLT LIGHT EMITTING DIODE LAMP WITH GREEN LENS, NEMA 4X RATED IN OUTER DOOR OF ENCLOSURE. LABEL "HEAT TRACE ON". PROVIDE A SPARE LAMP.
7. CONTACTOR: PROVIDE 60A CONTACTOR (NUMBER OF POLES AND CONTACTORS AS SHOWN IN LOAD CENTER SCHEDULE) WITH CONTACTS RATED 60 AMPS RESISTIVE AT 240 VOLTS AND A 120 VOLT CONTROL COIL.
8. SPLICE KIT: POWER TO HEAT TRACE CABLE, LISTED FOR WET LOCATIONS. INSTALL PER HEAT TRACE MANUFACTURER'S RECOMMENDATIONS.
9. HEAT TRACE CABLE: SELF-REGULATION LONG LINE TYPE LISTED FOR CLASS I, DIVISION 2 USE AND RATED AT 10 WATTS/FOOT AT 240 VOLTS. NELSON LT210-J OR EQUAL.
10. HEAT TRACE END KIT PER MANUFACTURER.

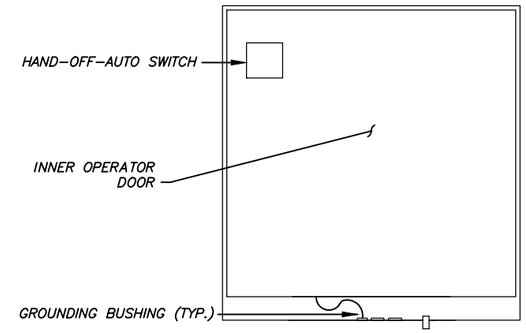

INNER-DOOR DETAIL

LOAD CENTER NOTES:

1. PLACARDS FOR LOAD CENTERS SHALL HAVE SUFFICIENT DURABILITY TO WITHSTAND THE ENVIRONMENT INVOLVED. CONTACT ENGINEER PRIOR TO ORDER OF PLACARD FOR MAXIMUM FAULT CURRENT.
2. LABEL THE FRONT WITH 3M SCOTCH CAL REFLECTIVE DECALS NOTING OWNERSHIP: MOA, PURPOSE: TH (THAW WIRE) AND THE VOLTAGE.
3. PROVIDE ARC FLASH WARNING LABELS WITH INCIDENT ENERGY VALUES AND PERSONAL PROTECTIVE EQUIPMENT (PPE) REQUIREMENTS ON EACH PIECE OF EQUIPMENT IN ACCORDANCE WITH NEC ARTICLE 110.16 AND NFPA 70E.

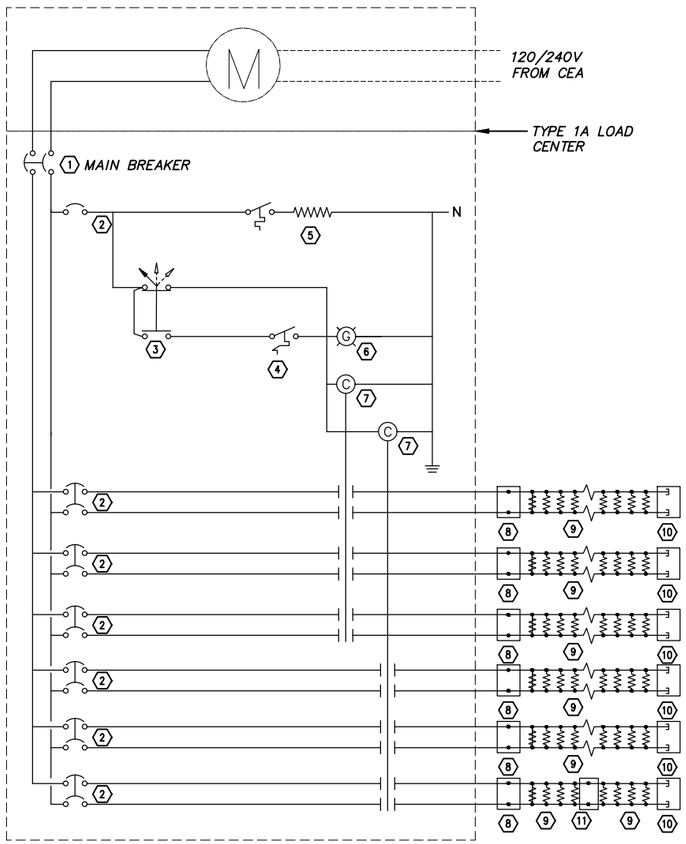

NOTE: GENERAL DETAIL, NUMBER OF CIRCUITS AND BREAKER SIZE MAY VARY. SEE PLAN DRAWINGS & LOAD CENTER SCHEDULES.

1 **LOAD CENTER CONTROL SCHEMATIC**

NTS

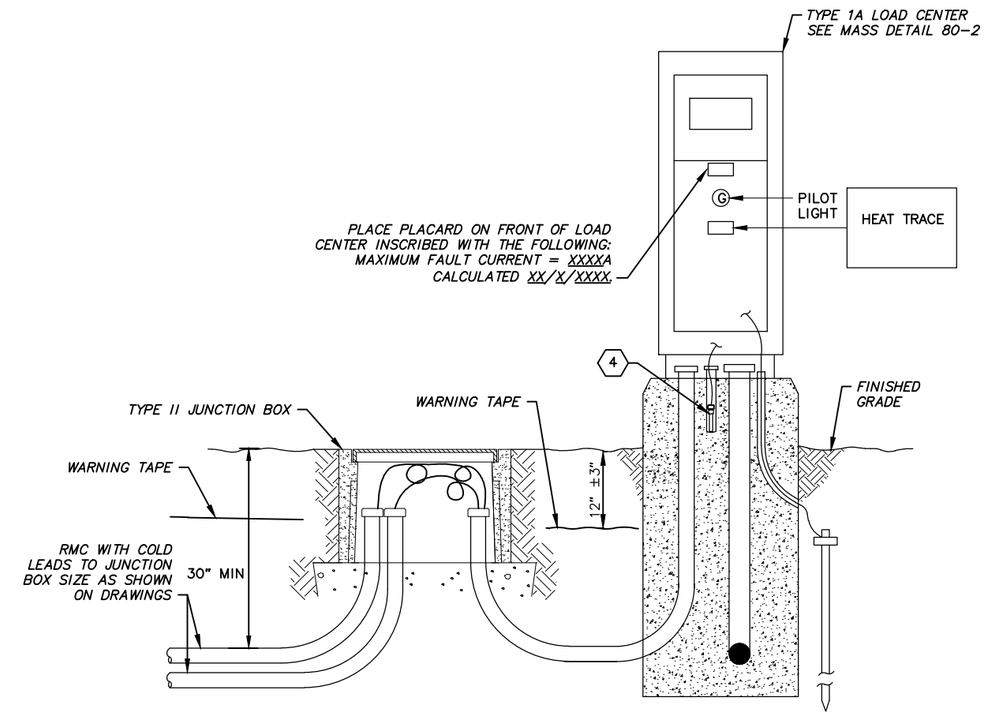

2 **HEAT TRACE LOAD CENTER**

NTS

RECORD DRAWING

1. DATA PROVIDED BY: _____ TITLE: _____
   THIS WILL SERVE TO CERTIFY THAT THESE RECORD DRAWINGS ARE A TRUE AND ACCURATE REPRESENTATION OF THE PROJECT AS CONSTRUCTED.
   CONTRACTOR: _____
   BY: _____ TITLE: _____ DATE: _____
2. DATA TRANSFERRED BY: _____ TITLE: _____
   COMPANY: _____ DATE: _____
3. BASED ON PERIODIC FIELD OBSERVATIONS BY THE ENGINEER (OR AN INDIVIDUAL UNDER HIS/HER DIRECT SUPERVISION), THE CONTRACTOR-PROVIDED DATA APPEARS TO REPRESENT THE PROJECT AS CONSTRUCTED.
   DATA TRANSFER CHECKED BY: _____ TITLE: _____
   COMPANY: _____ DATE: _____
   BY: _____

DATA	DRAWN BY	CHECKED BY
BASE		
TOPOGRAPHY		
PROFILE		
STORM SEWER		
WATER/SANITARY SEWER		
GAS		
TELEPHONE		
ELECTRIC		
DESIGN		
QUANTITIES		
PRELIMINARY/FINAL		
MUNICIPAL/STATE		

PLAN CHECK

FIELD BOOKS	BM NO.	LOCATION	ELEV.
DESIGN			
STAKING			
ASBUILT			
CONTRACTOR	BASIS OF THIS DATUM		
INSPECTOR			

CONSTRUCTION RECORD — VERTICAL DATUM

REV	DATE	DESCRIPTION	BY

REVISIONS

CRW ENGINEERING GROUP, LLC
3940 ARCTIC BLVD. SUITE 300
ANCHORAGE, ALASKA 99503
PHONE: (907) 562-3252
#AECL882-AK

CONSULTANT

STATE OF ALASKA 49TH — Tyler R. Keene EE-14401 — REGISTERED PROFESSIONAL ENGINEER

SEAL

MUNICIPALITY OF ANCHORAGE

PROJECT MANAGEMENT AND ENGINEERING DEPARTMENT

14-50 IMAGE DRIVE / REFLECTION DRIVE AREA ROAD RECONSTRUCTION – PHASE 2 SCHED B

HEAT TRACE CONTROLS SCHEMATIC & DETAILS

SCALE HOR. N/A VER. N/A | GRID SW1638, SW1738 | DATE SEPT 2019 | STATUS 65% | SHEET E3 of E8

File: J:\Jobs\Data\10133.00 Image Reflection Area Reconstruction\00 CADD\01 Working Set\03 Electrical\Phase 2\Heat Trace\10133.00 HT Controls – Phase 2.dwg

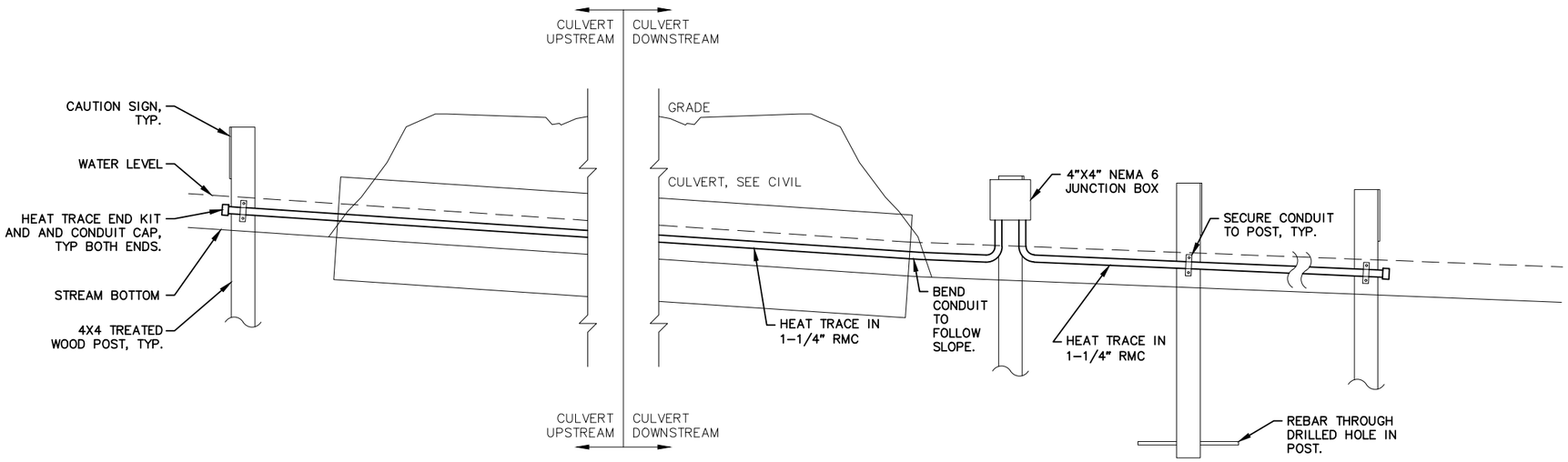

1 **EXISTING HEAT TRACE CULVERT DETAIL - IMAGE DRIVE**

NTS

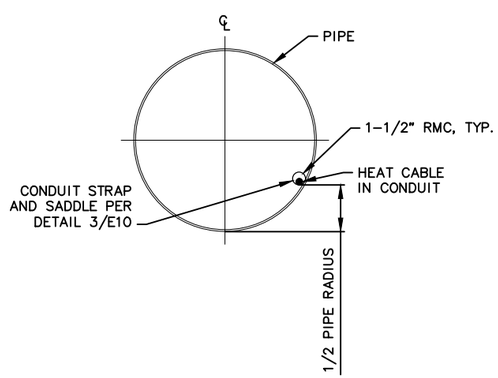

2 **HEAT TRACE MOUNTING DETAILS**

NTS

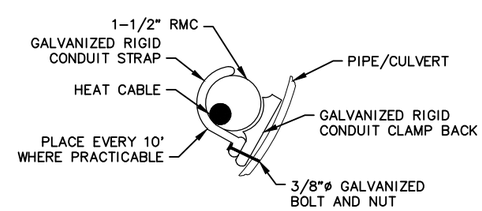

3 **PIPE CONDUIT SADDLE & STRAP**

NTS

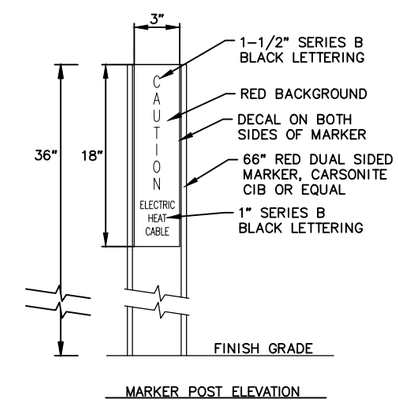

4 **CAUTION SIGN DETAIL**

NTS

RECORD DRAWING

1. DATA PROVIDED BY: _____ TITLE: _____
   THIS WILL SERVE TO CERTIFY THAT THESE RECORD DRAWINGS ARE A TRUE AND ACCURATE REPRESENTATION OF THE PROJECT AS CONSTRUCTED.
   CONTRACTOR: _____
   BY: _____ TITLE: _____ DATE: _____
2. DATA TRANSFERRED BY: _____ TITLE: _____
   COMPANY: _____ DATE: _____
3. BASED ON PERIODIC FIELD OBSERVATIONS BY THE ENGINEER (OR AN INDIVIDUAL UNDER HIS/HER DIRECT SUPERVISION), THE CONTRACTOR-PROVIDED DATA APPEARS TO REPRESENT THE PROJECT AS CONSTRUCTED.
   DATA TRANSFER CHECKED BY: _____ TITLE: _____
   COMPANY: _____ DATE: _____
   BY: _____

DATA	DRAWN BY	CHECKED BY
BASE		
TOPOGRAPHY		
PROFILE		
STORM SEWER		
WATER/SANITARY SEWER		
GAS		
TELEPHONE		
ELECTRIC		
DESIGN		
QUANTITIES		
PRELIMINARY/FINAL		
MUNICIPAL/STATE		
PLAN CHECK		

FIELD BOOKS	BM NO.	LOCATION	ELEV.
DESIGN			
STAKING			
ASBUILT			
CONTRACTOR	BASIS OF THIS DATUM		
INSPECTOR			
CONSTRUCTION RECORD	VERTICAL DATUM		

REV	DATE	DESCRIPTION	BY
REVISIONS			

CRW ENGINEERING GROUP, LLC
3940 ARCTIC BLVD. SUITE 300
ANCHORAGE, ALASKA 99503
PHONE: (907) 562-3252
#AECL882-AK
CONSULTANT

STATE OF ALASKA 49TH
Tyler R. Keene
EE-14401
REGISTERED PROFESSIONAL ENGINEER
SEAL

MUNICIPALITY OF ANCHORAGE

PROJECT MANAGEMENT AND ENGINEERING DEPARTMENT

14-50 IMAGE DRIVE / REFLECTION DRIVE AREA ROAD RECONSTRUCTION - PHASE 2 SCHED B

HEAT TRACE DETAILS

SCALE HOR. N/A VER. N/A | GRID SW1638, SW1738 | DATE SEPT 2019 | STATUS 65% | SHEET E4 of E8

File: J:\JobsData\10133.00 Image Reflection Area Reconstruction\00 CADD\01 Working Set\03 Electrical\Phase 2\Heat Trace\10133.00 HT Controls - Phase 2.dwg

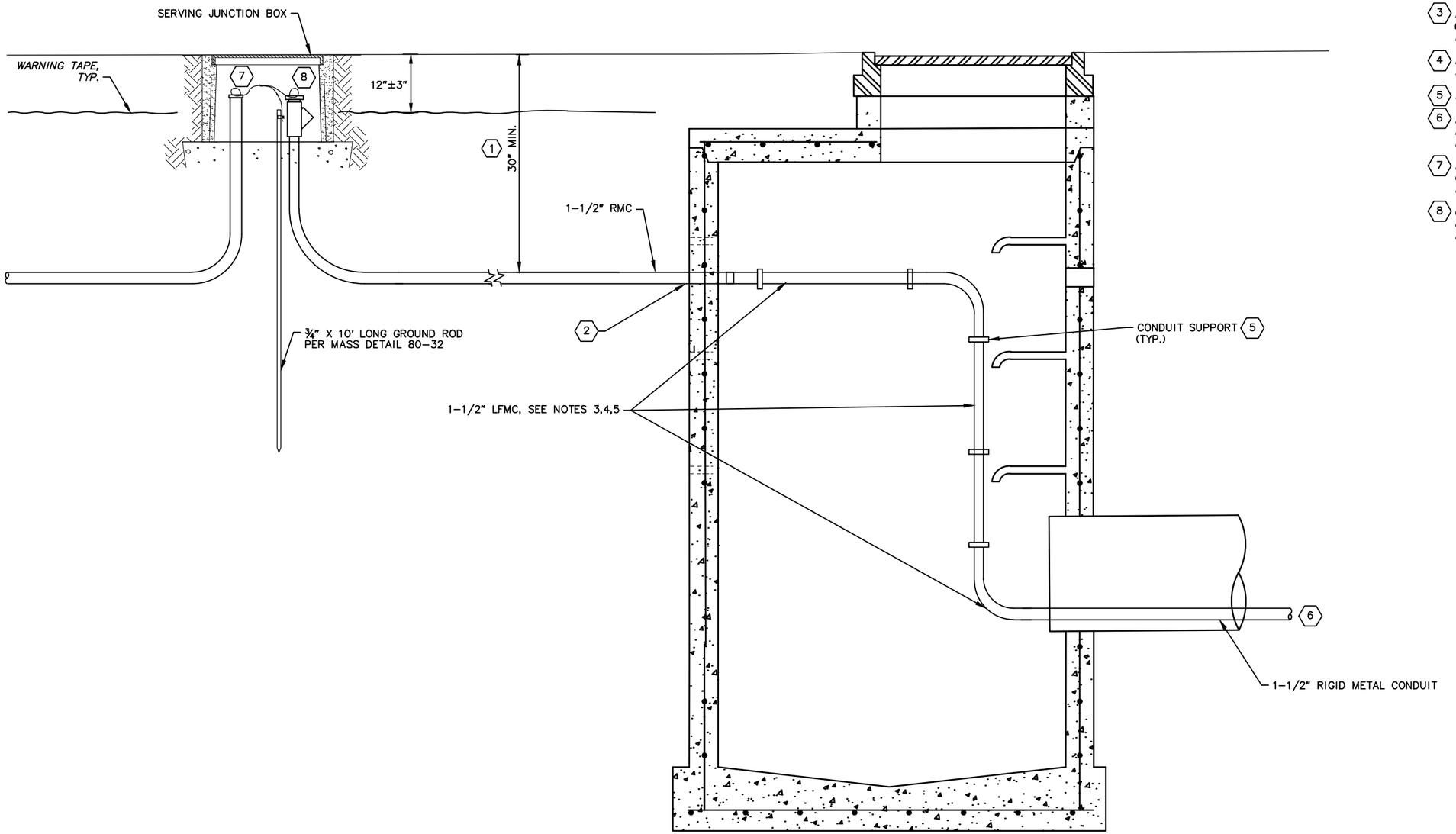

1 **NEW MANHOLE HEAT TRACE DETAIL**

NTS

MANHOLE HEAT TRACE CONSTRUCTION NOTES

1. INSTALL RIGID METAL CONDUITS (RMC) A MINIMUM OF 30 INCHES BELOW FINISHED GRADE.
2. CORE DRILL SEPARATE CONDUIT ACCESS HOLES FOR EACH CONDUIT THROUGH THE MANHOLE WALL AND GROUT AROUND THE INSTALLED CONDUIT.
3. PROVIDE 1-1/2" LIQUID-TIGHT FLEXIBLE METAL CONDUITS (LFMC) INSIDE THE MANHOLE. PROVIDE LFMC FITTINGS ON BOTH ENDS OF ALL SEGMENTS OF LFMC.
4. PROVIDE THE LFMC WITH A STAINLESS STEEL GROUND STRAP BETWEEN THE SECTIONS OF RMC.
5. ATTACH LFMC TO MANHOLE WALL ON 2.5' CENTERS.
6. PROVIDE 1-1/2" RMC WITH HEAT TRACE IN THE STORM DRAIN PIPES, EXTENDING THEM TO THE LOCATION(S) SHOWN IN THE DRAWINGS.
7. PROVIDE TYPE 2 OR TYPE 1A JUNCTION BOXES WITH GROUND ROD, GROUNDING BUSHINGS, AND GROUNDING PER MASS DETAIL 80-32 OR 80-31 AS SHOWN ON THE PLANS.
8. COMPLETE SPLICES BETWEEN HOT AND COLD LEADS IN THE JUNCTION BOX AND PROVIDE SEALING FITTINGS ON THE RMC.

RECORD DRAWING

1. DATA PROVIDED BY: _____ TITLE: _____
   THIS WILL SERVE TO CERTIFY THAT THESE RECORD DRAWINGS ARE A TRUE AND ACCURATE REPRESENTATION OF THE PROJECT AS CONSTRUCTED.
   CONTRACTOR: _____
   BY: _____ TITLE: _____ DATE: _____
2. DATA TRANSFERRED BY: _____ TITLE: _____
   COMPANY: _____ DATE: _____
3. BASED ON PERIODIC FIELD OBSERVATIONS BY THE ENGINEER (OR AN INDIVIDUAL UNDER HIS/HER DIRECT SUPERVISION), THE CONTRACTOR-PROVIDED DATA APPEARS TO REPRESENT THE PROJECT AS CONSTRUCTED.
   DATA TRANSFER CHECKED BY: _____ TITLE: _____
   COMPANY: _____ DATE: _____
   BY: _____

DATA	DRAWN BY	CHECKED BY
BASE		
TOPOGRAPHY		
PROFILE		
STORM SEWER		
WATER/SANITARY SEWER		
GAS		
TELEPHONE		
ELECTRIC		
DESIGN		
QUANTITIES		
PRELIMINARY/FINAL		
MUNICIPAL/STATE		

PLAN CHECK

FIELD BOOKS
DESIGN
STAKING
ASBUILT
CONTRACTOR
INSPECTOR

CONSTRUCTION RECORD

BM NO.	LOCATION	ELEV.
BASIS OF THIS DATUM		

VERTICAL DATUM

REV	DATE	DESCRIPTION	BY

REVISIONS

CRW ENGINEERING GROUP, LLC
3940 ARCTIC BLVD. SUITE 300
ANCHORAGE, ALASKA 99503
PHONE: (907) 562-3252
#AECL882-AK

CONSULTANT

STATE OF ALASKA 49TH REGISTERED PROFESSIONAL ENGINEER
Tyler R. Keene
EE-14401

SEAL

MUNICIPALITY OF ANCHORAGE

PROJECT MANAGEMENT AND ENGINEERING DEPARTMENT

14-50 IMAGE DRIVE / REFLECTION DRIVE AREA ROAD RECONSTRUCTION - PHASE 2 SCHED A

NEW MANHOLE HEAT TRACE DETAIL

SCALE HOR. N/A VER. N/A | GRID SW1638, SW1738 | DATE SEPT 2019 | STATUS 65% | SHEET E5 of E8

File: J:\JobsData\10133.00 Image Reflection Area Reconstruction\00 CADD\01 Working Set\03 Electrical\Phase 2\Heat Trace\10133.00 HT Controls - Phase 2.dwg

MANHOLE HEAT TRACE CONSTRUCTION NOTES

1. PROVIDE 1-1/2" LIQUID-TIGHT FLEXIBLE METAL CONDUITS (LFMC) INSIDE THE MANHOLE. PROVIDE LFMC FITTINGS ON BOTH ENDS OF ALL SEGMENTS OF LFMC.
2. PROVIDE THE LFMC WITH A STAINLESS STEEL GROUND STRAP BETWEEN THE SECTIONS OF RIGID STEEL CONDUIT.
3. ATTACH LFMC TO MANHOLE WALL ON 2.5' CENTERS.
4. PROVIDE 1-1/2" RIGID STEEL CONDUIT IN THE STORM DRAIN PIPE(S), EXTENDING THEM TO THE LOCATIONS SHOWN IN THE DRAWINGS.

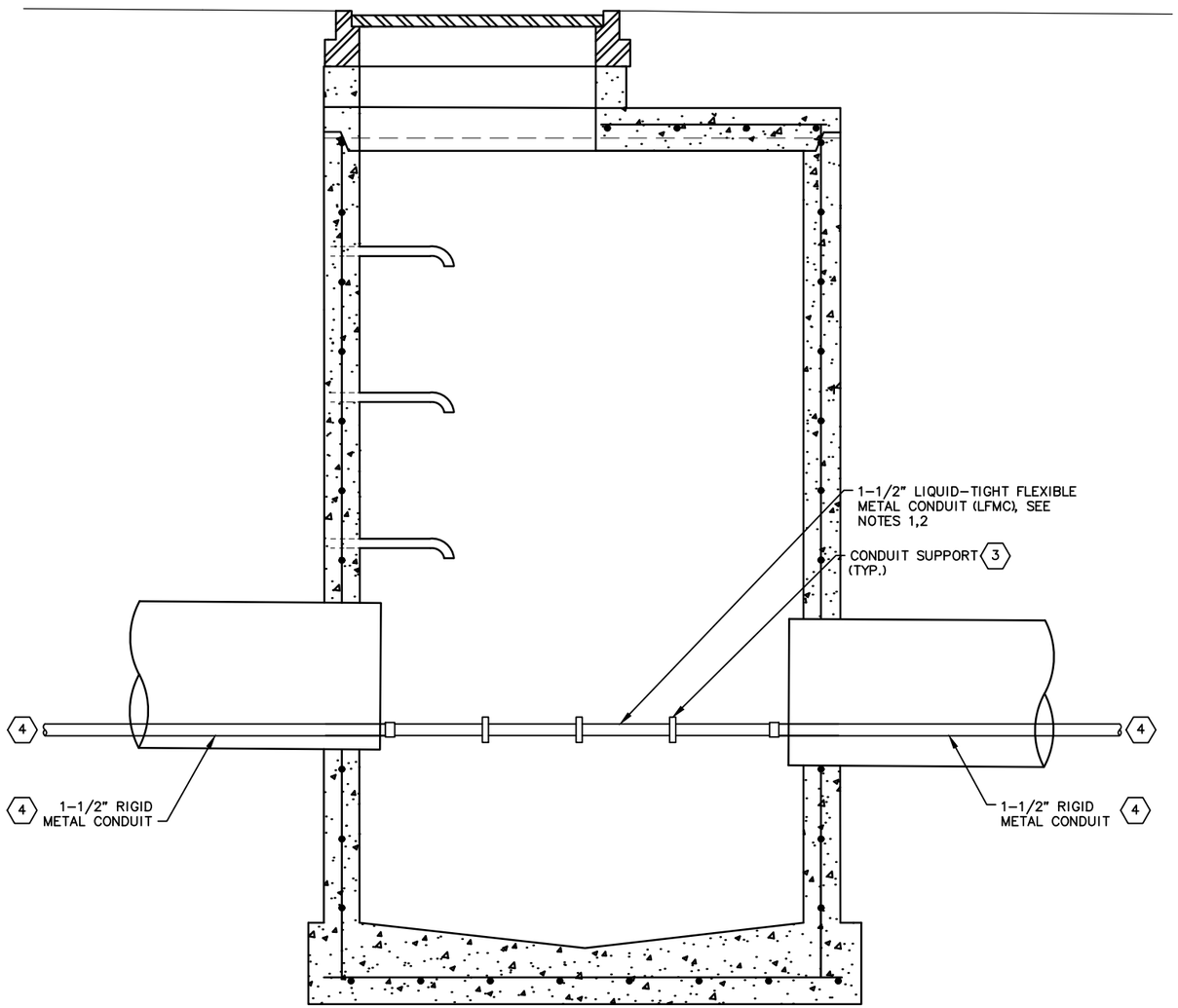

1 **MANHOLE HEAT TRACE PASS THROUGH DETAIL**

NTS

RECORD DRAWING

1. DATA PROVIDED BY: _____ TITLE: _____

THIS WILL SERVE TO CERTIFY THAT THESE RECORD DRAWINGS ARE A TRUE AND ACCURATE REPRESENTATION OF THE PROJECT AS CONSTRUCTED.

CONTRACTOR: _____

BY: _____ TITLE: _____ DATE: _____

2. DATA TRANSFERRED BY: _____ TITLE: _____

COMPANY: _____ DATE: _____

3. BASED ON PERIODIC FIELD OBSERVATIONS BY THE ENGINEER (OR AN INDIVIDUAL UNDER HIS/HER DIRECT SUPERVISION), THE CONTRACTOR-PROVIDED DATA APPEARS TO REPRESENT THE PROJECT AS CONSTRUCTED.

DATA TRANSFER CHECKED BY: _____ TITLE: _____

COMPANY: _____ DATE: _____

BY: _____

DATA	DRAWN BY	CHECKED BY
BASE		
TOPOGRAPHY		
PROFILE		
STORM SEWER		
WATER/SANITARY SEWER		
GAS		
TELEPHONE		
ELECTRIC		
DESIGN		
QUANTITIES		
PRELIMINARY/FINAL		
MUNICIPAL/STATE		

PLAN CHECK

FIELD BOOKS	BM NO.	LOCATION	ELEV.
DESIGN			
STAKING			
ASBUILT			
CONTRACTOR	BASIS OF THIS DATUM		
INSPECTOR			

CONSTRUCTION RECORD

VERTICAL DATUM

REV	DATE	DESCRIPTION	BY

REVISIONS

CRW ENGINEERING GROUP, LLC
3940 ARCTIC BLVD. SUITE 300
ANCHORAGE, ALASKA 99503
PHONE: (907) 562-3252
#AECL882-AK

CONSULTANT

STATE OF ALASKA 49TH Tyler R. Keene EE-14401 REGISTERED PROFESSIONAL ENGINEER

SEAL

MUNICIPALITY OF ANCHORAGE

PROJECT MANAGEMENT AND ENGINEERING DEPARTMENT

14-50 IMAGE DRIVE / REFLECTION DRIVE AREA ROAD RECONSTRUCTION - PHASE 2 SCHED A

NEW MANHOLE HEAT TRACE PASS THOUGH DETAIL

SCALE HOR. N/A VER. N/A | GRID SW1638, SW1738 | DATE SEPT 2019 | STATUS 65% | SHEET E6 of E8

File:J:\JobsData\10133.00 Image Reflection Area Reconstruction\00 CADD\01 Working Set\03 Electrical\Phase 2\Heat Trace\10133.00 HT Controls - Phase 2.dwg

MANHOLE HEAT TRACE CONSTRUCTION NOTES

1. PROVIDE 1-1/2" LIQUID-TIGHT FLEXIBLE METAL CONDUITS (LFMC) INSIDE THE MANHOLE. PROVIDE LFMC FITTINGS ON BOTH ENDS OF ALL SEGMENTS OF LFMC.
2. PROVIDE THE LFMC WITH A STAINLESS STEEL GROUND STRAP BETWEEN THE SECTIONS OF RIGID STEEL CONDUIT.
3. ATTACH LFMC TO MANHOLE WALL ON 2.5' CENTERS.
4. PROVIDE 1-1/2" RIGID STEEL CONDUIT IN THE STORM DRAIN PIPE(S), EXTENDING THEM TO THE LOCATIONS SHOWN IN THE DRAWINGS.

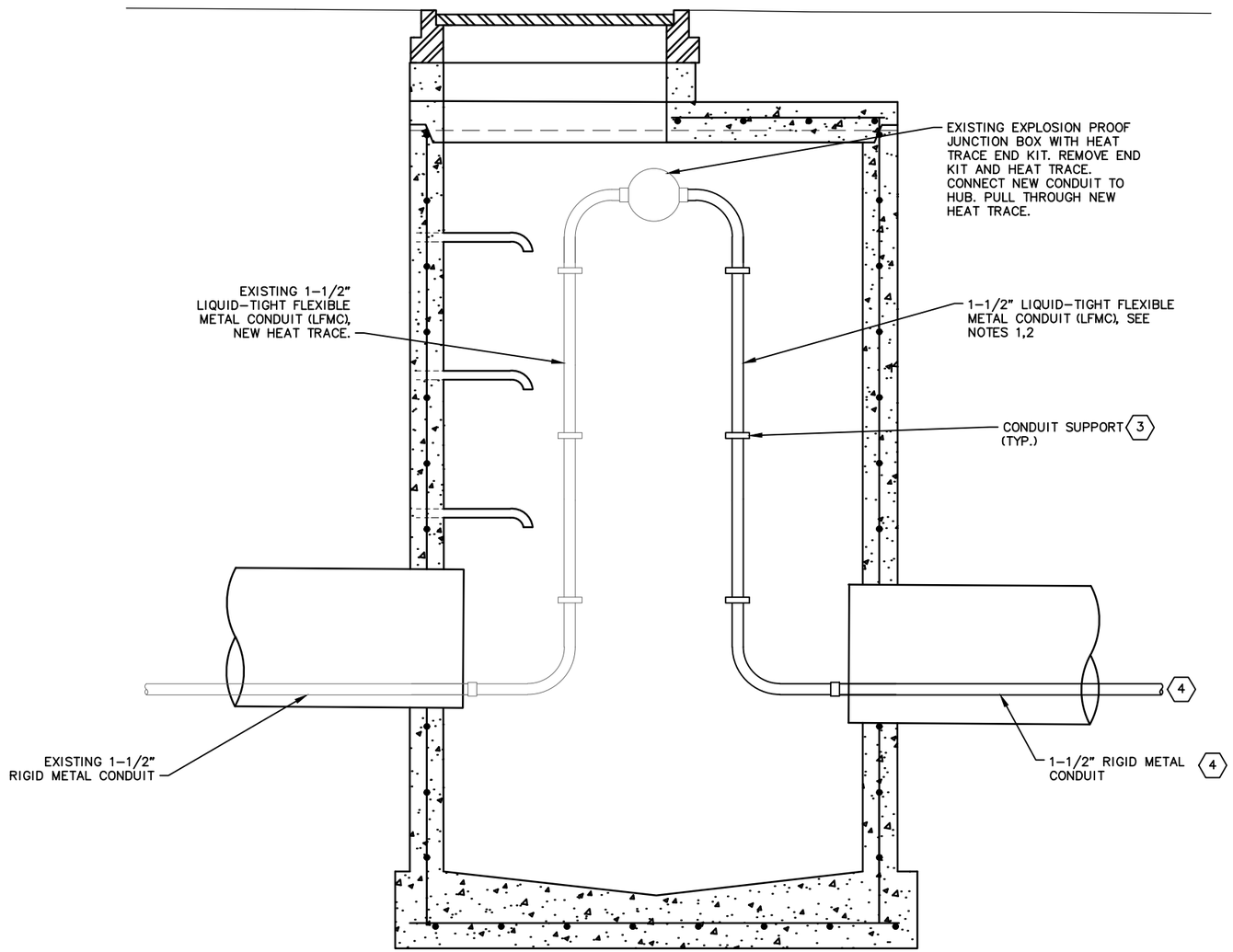

1 EXISTING MANHOLE HEAT TRACE DETAIL

NTS

RECORD DRAWING

1. DATA PROVIDED BY: _____ TITLE: _____
   THIS WILL SERVE TO CERTIFY THAT THESE RECORD DRAWINGS ARE A TRUE AND ACCURATE REPRESENTATION OF THE PROJECT AS CONSTRUCTED.
   CONTRACTOR: _____
   BY: _____ TITLE: _____ DATE: _____
2. DATA TRANSFERRED BY: _____ TITLE: _____
   COMPANY: _____ DATE: _____
3. BASED ON PERIODIC FIELD OBSERVATIONS BY THE ENGINEER (OR AN INDIVIDUAL UNDER HIS/HER DIRECT SUPERVISION), THE CONTRACTOR-PROVIDED DATA APPEARS TO REPRESENT THE PROJECT AS CONSTRUCTED.
   DATA TRANSFER CHECKED BY: _____ TITLE: _____
   COMPANY: _____ DATE: _____
   BY: _____

DATA	DRAWN BY	CHECKED BY
BASE		
TOPOGRAPHY		
PROFILE		
STORM SEWER		
WATER/SANITARY SEWER		
GAS		
TELEPHONE		
ELECTRIC		
DESIGN		
QUANTITIES		
PRELIMINARY/FINAL		
MUNICIPAL/STATE		
PLAN CHECK		

FIELD BOOKS	BM NO.	LOCATION	ELEV.
DESIGN			
STAKING			
ASBUILT			
CONTRACTOR	BASIS OF THIS DATUM		
INSPECTOR			
CONSTRUCTION RECORD	VERTICAL DATUM		

REV	DATE	DESCRIPTION	BY
REVISIONS			

CRW ENGINEERING GROUP, LLC
3940 ARCTIC BLVD. SUITE 300
ANCHORAGE, ALASKA 99503
PHONE: (907) 562-3252
#AECL882-AK
CONSULTANT

STATE OF ALASKA 49TH Tyler R. Keene EE-14401 REGISTERED PROFESSIONAL ENGINEER
SEAL

MUNICIPALITY OF ANCHORAGE

PROJECT MANAGEMENT AND ENGINEERING DEPARTMENT

14-50 IMAGE DRIVE / REFLECTION DRIVE AREA ROAD RECONSTRUCTION - PHASE 2 SCHED A

EXISTING MANHOLE HEAT TRACE DETAIL

SCALE HOR. N/A VER. N/A | GRID SW1638, SW1738 | DATE SEPT 2019 | STATUS 65% | SHEET E7 of E8

File:J:\JobsData\10133.00 Image Reflection Area Reconstruction\00 CADD\01 Working Set\03 Electrical\Phase 2\Heat Trace\10133.00 HT Controls - Phase 2.dwg

LOAD CENTER NO. H TYPE: 1A

LOCATION: STATION – 42+14.8, OFFSET – 35.5 LT, IMAGE DRIVE

10 POLE, 60 AMP CONTACTORS (HEAT TRACE)

MAIN BREAKER A: 2 POLE, 100 AMPS, 240 VOLTS

PANEL A 120/240 VOLTS SINGLE PHASE 3 WIRE

200 AMPS MAIN LUGS, 10,000 AMPS INTERRUPT CAPACITY

CKT.	CIRCUIT DESCRIPTION	KVA	AMP			AMP	KVA	CIRCUIT DESCRIPTION	CKT.
H1	CUVERT HEAT TRACE (EXISTING)	1.8	30/2*	1	2	30/2*	1.8	CULVERT HEAT TRACE (EXISTING)	H2
H3	STORM DRAIN HEAT TRACE	4.2	40/2*	3	4	20/2*	0.0	SPARE	H4
H5	SPARE	0.0	20/2*	5	6	15/1	1.0	HEAT TRACE CONTROL	H6
H7	SPARE	0.0	20/1	7	8				
				9	10				
				11	12				
				13	14				
				15	16				

TOTAL CONNECTED LOAD = 8.8 KVA

*30mA GFCI BREAKERS TOTAL AMPS = 36.7 A

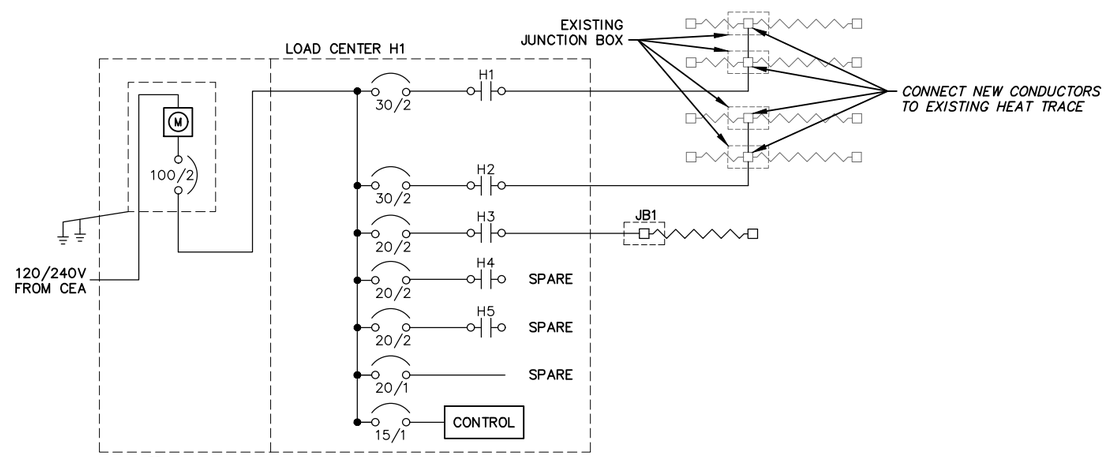

1 **LOAD CENTER H1 POWER ONE-LINE**

NTS

JUNCTION BOX TABLE				
TAG	TYPE	CIRCUITS	STATION	OFFSET
JBE	EXISTING ABOVE GRADE JUNCTION BOX	H3	42+15.0	23.2 LT
JB1	TYPE 1A	H3	42+15.0	23.2 LT

NEW HEAT TRACE TABLE			
CIRCUIT	FROM	TO	LENGTH
H3	JB1	JBE	375

VOLTAGE DROP TABLE				
CIRCUIT	CONDUCTOR SIZE (AWG)	LENGTH (FT)	CURRENT (AMPS)	V.D.
H1	10	20	7.5	0.13%
H2	10	30	7.5	0.19%
H3	8	15	17.5	0.15%

RECORD DRAWING

1. DATA PROVIDED BY: _____ TITLE: _____
   THIS WILL SERVE TO CERTIFY THAT THESE RECORD DRAWINGS ARE A TRUE AND ACCURATE REPRESENTATION OF THE PROJECT AS CONSTRUCTED.
   CONTRACTOR: _____
   BY: _____ TITLE: _____ DATE: _____
2. DATA TRANSFERRED BY: _____ TITLE: _____
   COMPANY: _____ DATE: _____
3. BASED ON PERIODIC FIELD OBSERVATIONS BY THE ENGINEER (OR AN INDIVIDUAL UNDER HIS/HER DIRECT SUPERVISION), THE CONTRACTOR–PROVIDED DATA APPEARS TO REPRESENT THE PROJECT AS CONSTRUCTED.
   DATA TRANSFER CHECKED BY: _____ TITLE: _____
   COMPANY: _____ DATE: _____
   BY: _____

DATA	DRAWN BY	CHECKED BY
BASE		
TOPOGRAPHY		
PROFILE		
STORM SEWER		
WATER/SANITARY SEWER		
GAS		
TELEPHONE		
ELECTRIC		
DESIGN		
QUANTITIES		
PRELIMINARY/FINAL		
MUNICIPAL/STATE		

PLAN CHECK

FIELD BOOKS	BM NO.	LOCATION	ELEV.
DESIGN			
STAKING			
ASBUILT			
CONTRACTOR	BASIS OF THIS DATUM		
INSPECTOR			

CONSTRUCTION RECORD — VERTICAL DATUM

REV	DATE	DESCRIPTION	BY

REVISIONS

CRW ENGINEERING GROUP, LLC
3940 ARCTIC BLVD. SUITE 300
ANCHORAGE, ALASKA 99503
PHONE: (907) 562–3252
#AECL882–AK

CONSULTANT

STATE OF ALASKA 49TH Tyler R. Keene EE-14401 REGISTERED PROFESSIONAL ENGINEER

SEAL

MUNICIPALITY OF ANCHORAGE

PROJECT MANAGEMENT AND ENGINEERING DEPARTMENT

14–50 IMAGE DRIVE / REFLECTION DRIVE AREA ROAD RECONSTRUCTION – PHASE 2 SCHED B

HEAT TRACE LOAD CENTER SCHEDULE & ONE–LINE

SCALE HOR. N/A VER. N/A | GRID SW1638, SW1738 | DATE SEPT 2019 | STATUS 65% | SHEET E8 of E8

File: J:\JobsData\10133.00 Image Reflection Area Reconstruction\00 CADD\01 Working Set\03 Electrical\Phase 2\Heat Trace\10133.00 HT LC Schedule & One-line – Phase 2.dwg